AcuFlow Series 3000

Hydraulically Actuated Diaphragm Metering Pump

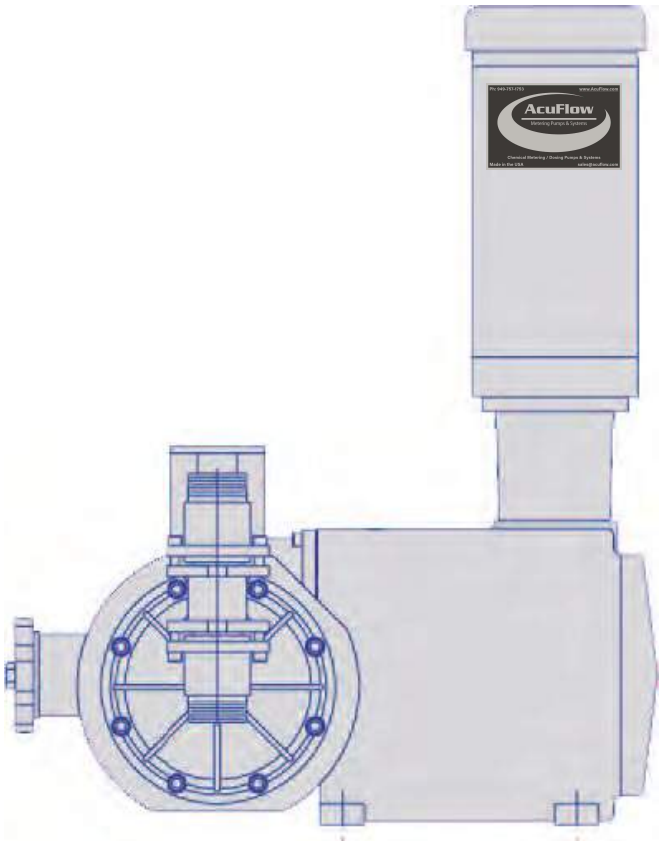

INSTALLATION, OPERATION, & MAINTENANCE MANUAL

AcuFlow

1642 McGaw Avenue, Irvine, Ca 92614 • (949) 757-1753 • sales@acuflow.com

Original installation and operating instructions.

CONTENTS

		Page
1.	**General information**	**2**
1.1	Introduction	2
1.2	Service documentation	2
1.3	Applications	2
1.4	Warranty	2
2.	**Safety**	**2**
2.1	Identification of safety instructions in this manual	3
2.2	Qualification and training of personnel	3
2.3	Risks when safety instructions are not observed	3
2.4	Safety-conscious working	3
2.5	Safety instructions for the operator/user	3
2.6	Safety instructions for maintenance, inspection and installation work	3
2.7	Unauthorised modification and manufacture of spare parts	3
2.8	Improper operating methods	3
2.9	Safety of the system in the event of a failure in the dosing system	4
3.	**Technical data**	**5**
4.	**Transport and delivery**	**5**
4.1	Delivery	5
4.2	Unpacking	5
4.3	Intermediate storage	5
4.4	Returning the unit to the factory for repair or evaluation	5
5.	**Product Overview**	**6**
6.	**Installation**	**8**
6.1	General information on installation	8
6.2	Location	8
6.3	Piping	8
6.4	Suction piping	8
6.5	Discharge piping	9
7.	**Electrical connections**	**9**
7.1	Power connections	9
8.	**Start-up/shutdown**	**10**
8.1	Start-up inspection	10
8.1A	Purging air from the hydraulic side	10
8.1B	Purging air from the process side	10
8.2	Pump calibration	10
9.	**Maintenance and repair w/ parts breakdown**	**11**
9.1	Preventative maintenance	11
9.2	Recommended spare parts (for metallic liquid end)	11
9.3	Oil change	11
9.4	Check valves	11
9.4A	Series 3000 check valve replacement - plastic	11
9.4B	Series 3000 check valve replacement - metallic	11
9.5	Diaphragm replacement	12
9.6	Adjusting internal relief valve	12
10.	**Drawings and diagrams**	**13**
11.	**Pump troubleshooting chart**	**21**

Warning
These complete installation and operating instructions are also available on www.acuflow.com.
Prior to installation, read these installation and operating instructions. Installation and operation must comply with local regulations and accepted codes of good practice.

1. General information

1.1 Introduction

These installation and operating instructions contain all the information required for starting up and handling the hydraulic diaphragm dosing pump.
If you require further information or if any problems arise, which are not described in detail in this manual, please contact AcuFlow.

1.2 Service documentation

If you have any questions, please contact the nearest AcuFlow distributor or factory directly.

1.3 Applications

The AcuFlow pump is suitable for liquid, non-abrasive and non-inflammable media strictly in accordance with the instructions in this manual.

Note ***Explosion-proof pumps are identified from the pump and motor nameplates.***

Warning
To operate a pump which has been identified as an explosion-proof pump for the dosing of inflammable media or for operation in potentially explosive operating sites, consult factory with details.

Warning
Other applications or the operation of pumps in ambient and operating conditions, which are not approved, are considered improper and are not permitted. AcuFlow accepts no liability for any damage resulting from incorrect use.

1.4 Warranty

Warranty in accordance with our general terms of sale and delivery is only valid

- if the pump is used in accordance with the information within this manual.
- if the pump is not dismantled or incorrectly handled.
- if repairs are carried out by authorized and qualified personnel.

2. Safety

This manual contains general instructions that must be observed during installation, operation and maintenance of the pump. This manual must therefore be read by the installation engineer and the relevant qualified personnel/operators prior to installation and start-up, and must be available at the installation location of the pump at all times.
It is not only the general safety instructions given in this "Safety" section that must be observed, but all special safety instructions given in the other sections.

2.1 Identification of safety instructions in this manual

If the safety instructions or other advice in this manual are not observed, it may result in personal injury or malfunction and damage to the pump. The safety instructions and other advice are identified by the following symbols:

Warning signs	Type of danger
	Warning – hand injuries.
	Warning – high-voltage.
	Warning – flammable substances.
	Warning – hot surface.
	Warning – danger zone.

2.2 Qualification and training of personnel

The personnel responsible for the operation, maintenance, inspection and installation must be appropriately qualified for these tasks. Areas of responsibility, levels of authority and the supervision of the personnel must be precisely defined by the operator.
If the personnel do not have the necessary knowledge, the necessary training and instruction must be given. If necessary, training can be performed by the manufacturer/supplier at the request of the operator of the pump. It is the responsibility of the operator to make sure that the contents of this manual are understood by the personnel.

2.3 Risks when safety instructions are not observed

Non-observance of the safety instructions may have dangerous consequences for the personnel, the environment and the pump. If the safety instructions are not observed, all rights to claims for damages may be lost. Non-observance of the safety instructions may lead to the following hazards:

- failure of important functions of the pump/system
- failure of specified methods for maintenance
- harm to humans from exposure to electrical, mechanical and chemical influences
- damage to the environment from leakage of harmful substances.

2.4 Safety-conscious working

The safety instructions in this manual, applicable national health and safety regulations and any operator internal working, operating and safety regulations must be observed.

2.5 Safety instructions for the operator/user

Hazardous hot or cold parts on the pump must be protected to prevent accidental contact.
Leakages of dangerous substances (e.g. hot, toxic) must be disposed of in a way that is not harmful to the personnel or the environment. Legal regulations must be observed.
Damage caused by electrical energy must be prevented.

2.6 Safety instructions for maintenance, inspection and installation work

The operator must ensure that all maintenance, inspection and installation work is carried out by authorised and qualified personnel, who have been adequately trained by reading this manual.
All work on the pump should only be carried out when the pump is stopped. The procedure described in this manual for stopping the pump must be observed.
Pumps or pump units which are used for media that are harmful to health must be decontaminated.
All safety and protective equipment must be immediately restarted or put into operation once work is complete.
Observe the points described in the initial start-up section prior to subsequent start-up.

Warning
Make sure that the pump is suitable for the actual dosing medium! Observe the chemical manufacturer's safety instructions when handling chemicals! Do not operate the pump next to closed valves (dead head).

Warning
The pump housing, control unit and sensors must only be opened by personnel authorised by AcuFlow! Repairs must only be carried out by authorised and qualified personnel! Wear protective clothing (gloves and goggles) when working on the dosing head, connections or lines! Before removing the dosing head, valves and lines, empty any remaining medium in the dosing head into a drip tray by carefully unscrewing the suction valve.

Caution

The resistance of the parts that come into contact with the media depends on the media, media temperature and operating pressure. Ensure that parts in contact with the media are chemically resistant to the dosing medium under operating conditions!

2.7 Unauthorised modification and manufacture of spare parts

Modification or changes to the pump are only permitted following agreement with the manufacturer. Original spare parts and accessories authorised by the manufacturer are safe to use. Using other parts can result in liability for any resulting consequences. Additionally, it voides the warranty immediately.

2.8 Improper operating methods

The operational safety of the supplied pump is only ensured if it is used in accordance with section 3.*Technical data*. The specified limit values must under no circumstances be exceeded.

Note

Explosion-proof pumps are identified from the pump and motor nameplates. An EC declaration of conformity is provided in accordance with the EC directive 94/9/EC, the so-called ATEX directive. This declaration of conformity replaces the declaration of conformity in this manual.

Warning
To operate a pump which has been identified as an explosion-proof pump for the dosing of inflammable media or for operation in potentially explosive operating sites in accordance with the EC directive 94/9/EC, refer to the enclosed manual "ATEX-approved pumps" in addition to this manual.

If the assumption is made that a safe operation is no longer possible, switch off the pump and protect it against unintentional operation.
This action should be taken
- if the pump has been damaged.
- if the pump no longer seems to be operational.
- if the pump has been stored for an extended period of time inpoor conditions.

2.9 Safety of the system in the event of a failure in the dosing system
AcuFlow dosing pumps are designed according to the latest technologies and are carefully manufactured and tested. However, a failure may occur in the dosing system. Systems in which dosing pumps are installed must be designed in such a way that the safety of the entire system is still ensured following a failure of the dosing pump. Provide the relevant monitoring and control functions for this.

PRECAUTIONS
The following precautions should be taken when working with metering pumps.
Please read this section carefully prior to installation.

Protective Clothing
ALWAYS wear protective clothing, face shield, safety glasses and gloves when working on or near your metering pump. Additional precautions should be taken depending on the solution being pumped. Refer to **Material Safety Data Sheets** for the solution being pumped.

Hearing Protection
It is recommended that hearing protection be used if the pump is in an environment where the time-weighted average sound level (TWA) of 85 decibels is exceeded. (as measured on the A scale -- slow response)

Electrical Safety
- Remove power and ensure that it remains off while maintaining pump.
- **DO NOT FORGET TO CONNECT THE PUMP TO EARTH**
- Electric protection of the motor (Thermal protection or by means of fuses) is to correspond to the rated current indicated on the motor data plate.

Liquid Compatibility
Verify if the materials of construction of the wetted components of your pump are recommended for the solution (chemical) to be pumped.

Pumps Water "Primed"
All pumps are tested with water at the factory. If your process solution is not compatible with water, flush the **Pump Head Assembly** with an appropriate solution before introducing the process solution.

Plumbing and Electrical Connections
Always adhere to your local plumbing and electrical codes.

Line Depressurization
To reduce the risk of chemical contact during disassembly or maintenance, the suction and discharge lines should be depressurized before servicing.

Over Pressure Protection
To ensure safe operation of the system it is recommended that some type of safety/pressure-relief valve be installed to protect the piping and other system components from damage due to over-pressure.

Lifting
This manual should be used as a guide only - Follow your company's recommended lifting procedures. It is not intended to replace or take precedence over recommendations, policies and procedures judged as safe due to the local environment than what is contained herein. Use lifting equipment that is rated for the weight of the equipment to be lifted.

WARNING:
LOCKOUTS ARE REQUIRED BEFORE SERVICING THIS EQUIPMENT

SAFETY INSTRUCTIONS:
Shut off/Lockout pump power before servicing.
Be certain isolation valves are closed-chemical is shut off.
Bleed pressure before servicing.

3. Technical Data

SERIES 3000

Features

- Flow capacities up to 920 GPH (Duplex)
- Pressure Up to 700 PSI
- Modular design in aluminum housing
- Metering accuracy +/- 1%
- Easy capacity controls – manual/auto
- Built in safety – Internal relief valve
- Available in duplex to double flow capacity
- Ability to handle difficult liquids like slurries, off-gasing, and high viscosities

Specifications

Flow capacity adjustment – 0-100%
While the pump is running or stopped

Turndown Ratio	*Metering Accuracy*
Stroke length – 36:1	Steady state - +/- 1 %
Stroke frequency – 36:1	Linearity - +/- 1%
Combined – 360:1	Combined - +/- 1%

Maximum process fluid temperature
Custom engineered metallic liquid end: 500F
Metallic liquid end/PTFE diaphragm: 250F (121C)
Plastic Head: 140F (60C)
Plunger stroke length: 3”
Hydraulic oil capacity: 12 qts

Displacement per stroke - by plunger size
1” - 2.3469 cu. in. (38.46 ml)
1-1/4” - 3.6738 cu. in. (60.20 ml)
1-1/2” - 5.2906 cu. in. (86.70 ml)
1-3/4” - 7.2063 cu. in. (118.09 ml)
2” - 9.4102 cu. in. (154.21 ml)
2-1/4” - 11.9023 cu. in. (195.04 ml)
2-1/2” - 14.1561 cu. in. (231.98 ml)

Liquid End Material Options
316SS, Alloy 20, Hastelloy C, PVC, PVDF, and PTFE

Series 3000 Performance Table:

AcuFlow Model Number	Capacity GPH (LPH)	Pressure PSIG (bars)	Speed (SPM)	Plunger Diameter
CNIT 0844-0X018 CNIT 0858-0X018 CNIT 0888-0X018 CNIT 0812-0X018 CNIT 0814-0X018	24.1 (60.2) 31.9 (120.7) 48.0 (181.7) 64.0 (242.3) 76.0 (287.7)	700 (48)	44 58 88 117 140	1”
CNIT 1044-0X018 CNIT 1058-0X018 CNIT 1088-0X018 CNIT 1012-0X018 CNIT 1014-0X018	37.8 (94.6) 50.0 (189.3) 75.7 (286.5) 100 (378.5) 120 (454.2)	405 (28)	44 58 88 117 140	1-1/4”
CNIT 1244-0X018 CNIT 1258-0X018 CNIT 1288-0X018 CNIT 1212-0X018 CNIT 1214-0X01A	54.4 (135.9) 71.8 (271.8) 109 (412.6) 145 (548.9) 173 (654.9)	265 (18)	44 58 88 117 140	1-1/2”
CNIT 1444-0X018 CNIT 1458-0X018 CNIT 1488-0X018 CNIT 1412-0X01A CNIT 1414-0X01A	74 (185.1) 97.8 (370.2) 148 (560.2) 197 (745.7) 236 (893.4)	180 (12)	44 58 88 117 140	1-3/4”
CNIT 1644-0X018 CNIT 1658-0X018 CNIT 1688-0X01A CNIT 1612-0X01B CNIT 1614-0X01B	96.8 (241.9) 128 (484.5) 194 (724.4) 258 (976.6) 308 (1,165.9)	130 (9)	44 58 88 117 140	2”
CNIT 1844-0X018 CNIT 1858-0X018 CNIT 1888-0X01A CNIT 1812-0X01B CNIT 1814-0X01C	122.4 (305.9) 161 (609.5) 245 (927.4) 326 (1,234.0) 389 (1,476.3)	95 (6)	44 58 88 117 140	2-1/4”
CNIT 2044-0X018 CNIT 2058-0X01A CNIT 2088-0X01B CNIT 2012-0X01C CNIT 2014-0X01C	145 (378.5) 191 (757.1) 291 (1,135.6) 387 (1,514.2) 463 (1,824.6)	75 (5)	44 58 88 117 140	2-1/2”

4. Transport and Delivery

4.1 Delivery

Your new AcuFlow metering pump will be shipped mounted on a 3/4” thick plywood inside a master carton with a cardboard insert for both strength of the carton, but also to prevent the pump from moving inside the carton during transportation.

Carefully check the packaging for any signs of damages. Take pictures if necessary and have the delivery driver sign for these damages when submitting transportation damage claims.

4.2 Unpacking

Your pump will have at least the following:

- Pump unit mounted on a 3/4” plywood
- 2 qt. of Hydraulic oil
- Instruction manual

Check the pump’s label to make sure that the model and capacity is exactly what you ordered. Check the motor’s nameplate for the correct voltage according to your specification and that it matches with the supply voltage to run the motor installed on your pump.

Please visit www.acuflow.com/videos to view the unpacking procedure.

4.3 Intermediate storage

1. If the pump is to be stored for a period not exceeding six months, leave the pump in its original packaging in upright position, but fill the pump with hydraulic oil to capacity to protect internal components from moisture contamination.
2. Store the pump in a dry environment.
3. If storing the pump for more than 6 months, run the pump for a few minutes every 6 months to prevent oil deposit from forming.

4.4 Returning the unit to the factory for repair or evaluation

1. Call the factory and get an RMA (Return Material Authorization) number. The factory or its agent will send you an RMA form to fill out. This form will be required to be e-mailed back.
2. Drain the oil from the pump and replace the drain plug.
3. Remove and do not send the motor if instructed by the factory or its agent to save on freight cost.
4. Completely drain and flush the process fluid from the pump, neutralizing the fluid with water. Failure to do so could result in your pump being rejected by the factory and returned to you at your cost. No traces of any chemical should be left in the pump being returned.
5. Pack the unit properly.
6. Attach the RMA form and any MSDS of the liquid used on your pump.
7. Ship the pump and advise the factory of the tracking number.

If the pump is damaged through shipping, the customer will be responsible for that damage.

ACUFLOW PUMP LABEL

Always have the complete pump model and serial number available when contacting Acuflow for parts or service. This model number can be found on the data plate mounted on the back of the pump housing.

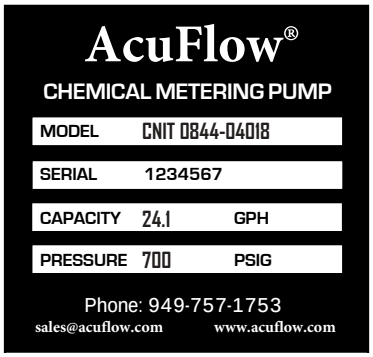

5. Product Overview

ACUFLOW HYDRAULIC METERING PUMP MODEL CODE

Typical AcuFlow Model:

AAAB CC(C)DD--EEFFGH(HP)

AAA: AcuFlow Pump Series Identifier

Series 900 - DM3 (Standard), DL4, DL3, etc.
Series 1000 - CJ4 (Standard), CA4, CJ3, etc.
Series 2000 - CD3 (Standard), CR3, CQ3, CL3, etc.
Series 3000 - CNI (Standard), KBI, HFI, CMI etc.
Series 4000 - GNI (Standard), GMI etc

B: Main Pumping Element

T = Single PTFE Disc Diaphragm
W = Double PTFE Disc Diaphragm
A = Single Hypalon Tube
B = Single Viton Tube

CC/CCC: Plunger Diameter

Series 1000	*Series 3000*
38 = 3/8”	08 = 1”
56 = 9/16”	10 = 1-1/4”
75 = 3/4”	12 = 1-1/2”
87 = 7/8”	14 = 1-3/4”
113 = 1-1/8”	16 = 2”
162 = 1-5/8”	18 = 2-1/4”
	20 = 2-1/2”

Series 2000	*Series 4000*
05 = 5/8”	07 = 7/8”
06 = 3/4”	09 = 1-1/8”
08 = 1”	13 = 1-9/16”
10 = 1-1/4”	20 = 2-1/2”
12 = 1-1/2”	24 = 3”
	32 = 4”

DD: Strokes Per Minute

29 = 29 SPM
44 = 44 SPM
58 = 58 SPM
88 = 88 SPM
97 = 97 SPM
12 = 117 SPM
14 = 140 SPM
17 = 170 SPM
19 = 190 SPM

EE: Liquid End Material

04 = 316 Stainless Steel
05 = Alloy 20
06 = Hastelloy C
08 = PVC
0A = Kynar (PVDF)

FF: Configuration Code

01 = Simplex Manual Adjustment
02 = Duplex Manual Adjustment
03 = Simplex Pneumatic Adjustment
04 = Duplex Pnematic Adjustment
05 = Simplex Electronic (4-20mA)
06 = Duplex Electronic (4-20mA)

G: Valve Ball Size

3 = 1/4”	8 = 7/8”	D = 2” Disc Valve
4 = 3/8”	9 = 1”	E = 2-1/4” Disc Valve
5 = 1/2”	A = 1-1/4”	F = 2-1/2” Disc Valve
6 = 5/8”	B = 1-1/2”	G = 3” Disc Valve
7 = 3/4”	C = 1-3/4”	H = 4” Disc Valve
V = 1/2” Double Ball Valve Check	W = 7/8” Double Ball Valve Check	Z = 3/8” Double Ball Valve Check

H: Liquid Connection

Blank = NPT F = Flange X = Other

I: Degassing Valve

Blank = No degassing valve D = Degassing valve

HP: High Pressure For a high pressure pump, add (HP) to model code

AcuFlow Also Offers: SERIES 1000

Features

- Flow capacities up to 61 GPH (Simplex), 123 GPH (Duplex)
- Pressure Up to 4,000 PSI
- Unibody Design – Less Parts
- Metering accuracy +/- 1%
- Easy capacity controls – manual/auto
- Built in safety – Internal relief valve
- Available in duplex to double flow capacity
- Ability to handle difficult liquids like slurries, off-gasing, and high viscosities

Specifications

Flow capacity adjustment – 0-100%
While the pump is running or stopped

Turndown Ratio	*Metering Accuracy*
Stroke length – 10:1	Steady state - +/- 1 %
Stroke frequency – 10:1	Linearity - +/- 1%
Combined – 100:1	Combined - +/- 1%

Maximum process fluid temperature
Custom engineered metallic liquid end: 500F
Metallic liquid end/PTFE diaphragm: 250F (121C)
Plastic Head: 140F (60C)
Plunger stroke length: 0.75
Hydraulic oil capacity: 2qts (simplex) 3qts (Duplex)

Displacement per stroke - by plunger size
3/8” - 0.08257 cu. in. (1.353 ml)
9/16” - 0.18595 cu. in. (3.047 ml)
3/4” - 0.33073 cu. in. (5.419 ml)
7/8” - 0.450246 cu. in. (7.378 ml)
1-1/8” - 0.78649 cu. in. (12.888 ml)
1-5/8” - 1.5537 cu. in. (25.461 ml)

Liquid End Material Options
316SS, Alloy 20, Hastelloy C, PVC, PVDF, and PTFE

Series 1000 Performance Table:

AcuFlow Model Number	Capacity GPH (LPH)	Pressure PSIG (bars)	Speed (SPM)	Plunger Diameter
CA4T 3829-0X013	0.55 (2.1)	4,000 (275)	29	3/8”
CA4T 3858-0X013	1.10 (4.2)		58	
CA4T 3897-0X013	1.85 (7.0)		97	
CA4T 3812-0X013	2.25 (8.5)		117	
CA4T 3814-0X013	2.70 (10.2)		140	
CA4T 3817-0X013	3.28 (12.4)		170	
CJ4T 5629-0X014	1.25 (4.7)	2,000 (75)	29	9/16”
CJ4T 5658-0X014	2.50 (9.5)		58	
CJ4T 5697-0X014	4.20 (15.9)		97	
CJ4T 5612-0X014	5.10 (19.3)		117	
CJ4T 5614-0X014	6.09 (23.1)		140	
CJ4T 5617-0X014	7.40 (28.0)		170	
CJ4T 7529-0X014	2.25 (8.5)	1,100 (75)	29	3/4”
CJ4T 7558-0X014	4.50 (17.1)		58	
CJ4T 7597-0X014	7.50 (28.4)		97	
CJ4T 7512-0X014	9.05 (34.3)		117	
CJ4T 7514-0X014	10.8 (40.9)		140	
CJ4T 7517-0X014	13.1 (49.6)		170	
CJ4T 8729-0X014	3.05 (11.5)	700 (48)	29	7/8”
CJ4T 8758-0X014	6.10 (23.0)		58	
CJ4T 8797-0X014	10.2 (38.6)		97	
CJ4T 8712-0X014	12.5 (47.3)		117	
CJ4T 8714-0X014	14.7 (55.6)		140	
CJ4T 8717-0X014	17.9 (67.8)		170	
CJ4T 11329-0X014	5.33 (20.2)	425 (48)	29	1-1/8”
CJ4T 11358-0X014	10.6 (40.1)		58	
CJ4T 11397-0X014	17.8 (67.4)		97	
CJ4T 11312-0X014	22.0 (83.3)		117	
CJ4T 11314-0X014	25.7 (97.3)		140	
CJ4T 11317-0X014	31.1 (117.7)		170	
CJ4T 16229-0X018	10.5 (39.7)	200 (13)	29	1-5/8”
CJ4T 16258-0X018	21.0 (79.5)		58	
CJ4T 16297-0X018	35.3 (133.6)		97	
CJ4T 16212-0X018	42.5 (160.9)		117	
CJ4T 16214-0X018	50.8 (192.3)		140	
CJ4T 16217-0X018	61.7 (233.5)		170	

AcuFlow Also Offers: SERIES 2000

Features
- Flow capacities up to 180 GPH (Duplex)
- Pressure Up to 1,800 PSI
- Modular design in aluminum housing
- Metering accuracy +/- 1%
- Easy capacity controls – manual/auto
- Built in safety – Internal relief valve
- Available in duplex to double flow capacity
- Ability to handle difficult liquids like slurries, off-gasing, and high viscosities

Specifications
Flow capacity adjustment – 0-100%
While the pump is running or stopped

Turndown Ratio
Stroke length – 20:1
Stroke frequency – 20:1
Combined – 200:1

Metering accuracy
Steady state - +/- 1 %
Linearity - +/- 1%
Combined - +/- 1%

Maximum process fluid temperature
Custom engineered metallic liquid end: 500F
Metallic liquid end/PTFE diaphragm: 250F (121C)
Plastic Head: 140F (60C)
Plunger stroke length: 1-1/2”
Hydraulic oil capacity: 4 qts (Simplex & Duplex)

Displacement per stroke - by plunger size
5/8” - 0.2938 cu. in. (4.81 ml)
3/4” - 0.6976 cu. in. (11.43 ml)
1” - 1.1334 cu. in. (18.57 ml)
1-1/4” - 1.8757 cu. in. (30.74 ml)
1-1/2” - 2.0797 cu. in. (34.08 ml)

Liquid End Material Options
316SS, Alloy 20, Hastelloy C, PVC, PVDF, and PTFE

Series 2000 Performance Table:

AcuFlow Model Number	Capacity GPH (LPH)	Pressure PSIG (bars)	Speed (SPM)	Plunger Diameter
CD3T 0529-0X014 CD3T 0558-0X014 CD3T 0597-0X014 CD3T 0512-0X014 CD3T 0514-0X014 CD3T 0519-0X014	3.98 (10.6) 7.97 (21.2) 13.3 (36.0) 16.07 (43.2) 19.2 (51.9) 26.2 (70.8)	1,800 (124)	29 58 97 117 140 191	5/8”
CD3T 0629-0X014 CD3T 0658-0X014 CD3T 0697-0X014 CD3T 0612-0X014 CD3T 0614-0X014 CD3T 0619-0X015	4.7 (17.8) 9.4 (35.6) 15.7 (59.8) 19.0 (71.9) 22.7 (85.6) 31.0 (117.3)	1,000 (69)	29 58 97 117 140 191	3/4”
CD3T 0829-0X014 CD3T 0858-0X014 CD3T 0897-0X014 CD3T 0812-0X015 CD3T 0814-0X015 CD3T 0819-0X015	7.68 (28.8) 15.37 (57.5) 25.7 (96.1) 31.0 (115.8) 37.09 (138.9) 50.61 (189.3)	360 (25)	29 58 97 117 140 191	1”
CD3T 1029-0X014 CD3T 1058-0X014 CD3T 1097-0X018 CD3T 1012-0X018 CD3T 1014-0X018 CD3T 1019-0X018	12.67 (45.4) 25.35 (90.8) 42.39 (151.4) 51.13 (185.5) 61.18 (227.1) 83.47 (302.8)	210 (14)	29 58 97 117 140 191	1-1/4”
CD3T 1229-0X014 CD3T 1258-0X015 CD3T 1297-0X018 CD3T 1212-0X018 CD3T 1214-0X018 CD3T 1219-0X018	16.0 (53.0) 32.07 (106.0) 53.63 (177.9) 64.68.0 (212.0) 77.4 (253.6) 105.6 (340.6)	195 (13)	29 58 97 117 140 191	1-1/2”

AcuFlow Also Offers: SERIES 4000

Features
- Flow capacities up to 3530 GPH (Duplex)
- Pressure Up to 3,500 PSI
- Modular design in aluminum housing
- Metering accuracy +/- 1%
- Easy capacity controls – manual/auto
- Built in safety – Internal relief valve
- Available in duplex to double flow capacity
- Ability to handle difficult liquids like slurries, off-gasing, and high viscosities

Specifications
Flow capacity adjustment – 0-100%
While the pump is running or stopped

Turndown Ratio
Stroke length – 48:1
Stroke frequency – 48:1
Combined – 480:1

Metering Accuracy
Steady state - +/- 1 %
Linearity - +/- 1%
Combined - +/- 1%

Maxiumum process fluid temperature
Custom engineered metallic liquid end: 500F
Metallic liquid end/PTFE diaphragm: 250F (121C)
Plastic Head: 140F (60C)
Plunger stroke length: 4.01”
Hydraulic oil capacity: 52 qts

Displacement per stroke - by plunger size
7/8” - 2.2698 in (37.19 ml)
1-1/8” - 3.8013 in (62.29 ml)
1-9/16” - 7.6453 in (125.29 ml)
2-1/2” - 19.63 in (321.77 ml)
3” - 28.1989 in (462.12 ml)
4” - 50.34 (824.99 ml)

Liquid End Material Options
316SS, Alloy 20, Hastelloy C, PVC, PVDF, and PTFE

Series 4000 Performance Table:

AcuFlow Model Number	Capacity GPH (LPH)	Pressure PSIG (bars)	Speed (SPM)	Plunger Diameter
GNIT 0744-0X01A GNIT 0770-0X01A GNIT 0788-0X01A GNIT 0714-0X01A	22.6 (85.5) 36.0 (136.3) 45.0 (170.3) 72.0 (272.5)	3,500 (241)	44 70 88 140	7/8”
GNIT 0944-0X01A GNIT 0970-0X01A GNIT 0988-0X01A GNIT 0914-0X01A	38.5 (145.7) 61.5 (232.8) 77.0 (291.5) 123 (465.6)	2,000 (138)	44 70 88 140	1-1/8”
GNIT 1344-0X01F GNIT 1370-0X01F GNIT 1388-0X01F GNIT 1314-0X01F	79.5 (300.9) 126 (477.0) 159 (601.9) 253 (957.7)	1,000 (69)	44 70 88 140	1-9/16”
GNIT 2044-0X01F GNIT 2070-0X01F GNIT 2088-0X01F GNIT 2014-0X01F	210 (794.9) 335 (1,268.1) 421 (1,593.7) 671 (2,540.0)	370 (26)	44 70 88 140	2-1/2”
GNIT 2444-0X01H GNIT 2470-0X01H GNIT 2488-0X01H GNIT 2414-0X01H	304 (1,150.8) 485 (1,835.9) 609 (2,305.3) 970 (3,671.8)	295 (20)	44 70 88 140	3”
GNIT 3244-0X01H GNIT 3270-0X01H GNIT 3288-0X01H GNIT 3214-0X01H	554 (2,097.1) 882 (3,338.7) 1,109 (4,198.0) 1,765 (6,681.2)	160 (11)	44 70 88 140	4”

AcuFlow Also Offers: SERIES 900

Features
- Flow capacities up to 6.5 GPH (Duplex)
- Pressure Up to 3,000 PSI
- Modular design in aluminum housing
- Metering accuracy +/- 1%
- Easy capacity controls – manual/auto
- Built in safety – Internal relief valve
- Available in duplex to double flow capacity
- Ability to handle difficult liquids like slurries, off-gasing, and high viscosities

Specifications
Flow capacity adjustment – 0-100%
While the pump is running or stopped

Turndown Ratio	*Metering Accuracy*
Stroke length – 10:1	Steady state - +/- 1 %
Stroke frequency – 10:1	Linearity - +/- 1%
Combined – 100:1	Combined - +/- 1%

Maxiumum process fluid temperature
Custom engineered metallic liquid end: 500F
Metallic liquid end/PTFE diaphragm: 250F (121C)
Plastic Head: 140F (60C)
Plunger stroke length: 0.754”
Hydraulic Oil Type F capacity: 1 qts
Gear Oil capacity: 1 qts

Displacement per stroke - by plunger size
3/16” - 0.0207 in (0.33 ml)
1/4” - 0.0368 in (0.60 ml)
3/8” - 0.0828 in (1.35 ml)

Liquid End Material Options
316SS, Alloy 20, Hastelloy C, PVC, PVDF, and PTFE

Series 900 Performance Table:

AcuFlow Model Number	Capacity GPH (LPH)	Pressure PSIG (bars)	Speed (SPM)	Plunger Diameter
DM3T 1929-0X013	0.14 (0.53)		29	
DM3T 1958-0X013	0.28 (1.06)		58	
DM3T 1997-0X013	0.47 (1.78)	3,000	97	3/16”
DM3T 1912-0X013	0.56 (2.12)	(200)	117	
DM3T 1914-0X013	0.67 (2.54)		140	
DM3T 1917-0X013	0.82 (3.10)		170	
DM3T 2529-0X013	0.24 (0.91)		29	
DM3T 2558-0X013	0.49 (1.85)		58	
DM3T 2597-0X013	0.82 (3.10)	3,000	97	1/4”
DM3T 2512-0X013	1.00 (3.79)	(200)	117	
DM3T 2514-0X013	1.19 (4.50)		140	
DM3T 2517-0X013	1.44 (5.45)		170	
DM3T 3829-0X013	0.55 (2.08)		29	
DM3T 3858-0X013	1.11 (4.20)		58	
DM3T 3897-0X013	1.86 (7.04)	3,000	97	3/8”
DM3T 3812-0X013	2.24 (8.48)	(200)	117	
DM3T 3814-0X013	2.69 (10.18)		140	
DM3T 3817-0X013	3.25 (12.30)		170	

6. Installation

Note ***If pump is not going to be installed immediately, but will be placed in storage for a period not exceeding 6 months, see Section 4.3 for instructions.***

6.1 General information on installation
Prior to shipment, each pump is factory tested under application hydraulic conditions, using water. The internal relief valve is preset to meet the operating conditions specified on the purchase order, and the pump is fully assembled and ready for installation. Protective caps are used to cover the suction and discharge check valves during shipment, and containers of hydraulic oil have been included in the shipping carton.
When unpacking the pump, make certain that no loose components are accidentally discarded. Examine the pump for shipping damage. If damage has occurred, a claim must be filed with the freight carrier within 24 hours.

6.2 Location
1. The pump installation site should provide easy access for capacity adjustment, routine maintenance, and where possible, to protect the pump from the elements and from leaks or drips from other process equipment.
2. The pump should be located on a level surface.While not required, it is suggested that the pump be bolted on a concrete pad or slightly raised platform above floor level to protect pump from washdowns.
3. Pumps installed outdoors should be shaded from direct sunlight and protected from the elements. Direct sunshine and ambient temperatures above 90°F could cause excessive hydraulic oil and motor temperatures.

Installations with ambient temperatures outside 50-100°F require changing the oil to a different viscosity index to assure reliable performance. In extreme old temperatures, insulation and heat tracing maybe required.

6.3 Piping
1. The AcuFlow® Series 3000 is a reciprocating motion type pump. Therefore, size the piping system to accommodate peak instantaneous flow which is 3.14 times pump capacity (example: 60gph x 3.14 = 188 gph). Failure to do so may restrict fluid flows, resulting in erratic pump performance.
2. Piping materials selected must be resistant to corrosion by the liquid being pumped, and rated to withstand maximum pressure and temperatures of the system.
3. When determining pipe size, be certain that it is equal to, or the next size larger than, the pump check valve connections.
4. When selecting fittings for use with flexible hose or tubing, be certain that the I.D. is equal to or larger than that of the tubing. Failure to do so may restrict fluid flows, resulting in erratic pump performance.
5. Use pipe sealant(s) sparingly. Excess sealant could dislodge and impede proper check valve operation. Be particularly careful when making pipe connections to plastic pump heads, since use of excessive sealant and/or overtightening may crack plastic pump heads.
6. Shut-off valves and unions installed in the suction and discharge pipelines will facilitate pump servicing. Please refer to Figure 3 for a typical installation.

6.4 Suction piping
1. Before connecting the pump, be certain that the suction piping is completely clean by flushing thoroughly. Failure to do so may result in foreign matter entering and damaging the pump.
2. Keep the suction line as short and straight as possible. A flooded suction or gravity feed of the process fluid to the pump inlet is preferred. A suction line strainer is highly recommended to prevent foreign matter from entering and damaging the pump.

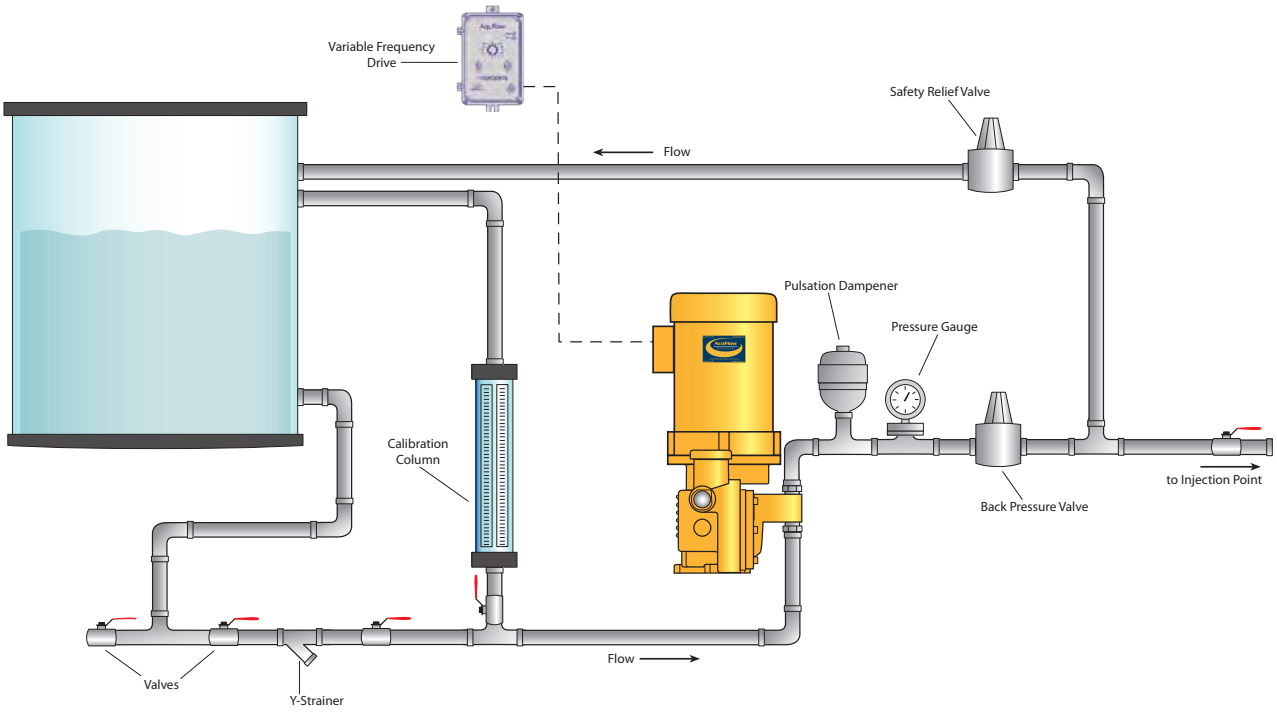

Figure 3. Typical Metering Pump Installation

Note ***Please consult factory for suction lift application. Some chemicals tend to off gas more in suction lift.***
Suction lift applications require the use of a foot valve and strainer to prevent loss of prime and to prevent foreign material from entering the pump.

3. Suction piping must be absolutely airtight to assure accurate pumping. If air or gas is allowed to accumulate inside the pump head, the output will become erratic or stop altogether.
4. Piping should be sloped to prevent the formation of vapor pockets, which could eventually accumulate inside the pump head resulting in erratic pump delivery.
5. Provide necessary pipe supports to avoid placing strain on the pump connections. Flexible connections can be used if pressure permits. If flexible suction line is used, be sure that selection and installation will prevent wall collapse and thus a starved suction condition.
6. Provision should be made in the system to avoid the possibility of running the pump dry. Typically this is accomplished by wiring a low-level shut-off switch mounted in the supply tank to the pump motor starter.
7. Where pump fluids may solidify, crystallize, etc., provision should be made to flush the pump and piping regularly, especially prior to shutdown.

6.5 Discharge piping

1. Install adequately sized pipe with a pressure rating in excess of the pressure relief valve setting.
2. A minimum positive pressure differential of 25 psi between the suction and discharge valves is recommended for proper hydraulic bypass operation and seating of the ball checks. Should normal discharge pressure be less than the suction pressure, an artificial discharge pressure must be created to prevent siphoning. This can be accomplished by the use of a back pressure valve installed in the discharge piping.
3. A properly sized pulsation dampener installed in the discharge pipeline between the pump and back pressure valve will smooth out flow peaks, reduce “water hammer” and protect downstream instrumentation.
4. AcuFlow suggests placing a pressure gauge with isolator close to the discharge of the pump to visually see the proper functioning of the pump.

Caution ***The internal relief valve is designed only to protect the pump and drive components in the event the piping system is restricted or blocked while the pump is in operation. If there are other sources of pressure or hydraulically isolated sections of piping in the system, an external safety relief valve must be installed in the pump discharge line as close to the pump as possible, and BEFORE any isolation valve. The safety relief valve should be piped back to the suction tank or safety drain as shown in Figure 3.***

5. We also strongly suggest that the back pressure valve be located as close to the discharge valve of the pump as possible (in the range of 10 to 20 times the pipe diameter).

7. Electrical Connections

7.1 Power connections

1. Check the nameplate rating of the motor and any auxiliary electrical equipment against the available power supply before making connections. Direction of rotation of the motor is important, and must be clockwise when viewing the motor from the top. Jog the motor to check rotation.
2. Standard wiring and conduit piping practice in accordance with local electrical codes should be followed. A motor starter with properly sized thermal overload heater is recommended.
3. Provide adequate ventilation for the drive motor.

Caution ***Motor starters with properly sized thermal overload are recommended for motor protection.***

Note ***Motors are warranted by the motor manufacturer. You can obtain prompt local service by consulting the motor manufacturer’s authorized service station nearest you, as listed on the Internet or in the yellow pages. AcuFlow can also assist you in locating this information.***

All electrical connections must be done by a qualified electrician!

Please ensure that the nearby environment does not have any flammable liquids/fumes.

8. Start-up/shutdown

8.1 Start-up inspection

Several items should be checked after the pump has been installed and prior to initial start-up.

1. Series 3000 pumps are shipped with hydraulic oil supplied separately in 1-quart or 1-gallon containers.

Note ***The oil shipped with the pump is for the typical application - operation at ambient temperatures from 50-100°F.***

Please visit www.acuflow.com/videos to view how to load oil into the pump.

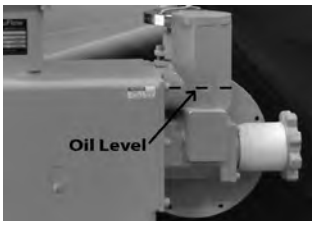

   Remove the reservoir cover and slowly pour in the hydraulic oil until it reaches the level mark shown on the pump housing.
2. Check to be certain that accessory components and fittings have been installed in the proper orientation and sequence as shown in Figure 3.
3. Check to be certain that the electrical supply matches the pump nameplate electrical characteristics.
4. Make certain that suction and discharge valves are open prior to pump start-up.
5. Jog motor to assure proper clockwise rotation.
6. After initial filling, run the pump for 15 minutes with micrometer knob set at 0% to allow hydraulic oil to completely fill all pump cavities, then recheck level and add oil as necessary. Smaller plunger size pumps may require longer running at 0% micrometer setting to fully vent entrained air from the hydraulic oil.
7. It is important that pump suction and discharge lines are free of entrained air. To assure proper start-up, start the pump without any discharge pressure (vented to atmosphere) and with the micrometer set at 0% capacity. Slowly turn the micrometer towards 100% capacity to fill the pumping system with process fluid.

Note ***On suction lift applications, it may be necessary to prime the pump by first wetting the ball check valves, and starting the pump without any discharge pressure (vented to atmosphere). Suction lift applications require the use of a footvalve strainer to prevent loss of prime.***

8.1A Purging the air from the hydraulic side

It is very important to ensure that there is no trapped air of even the smallest volume on the hydraulic side of the pump. Any trapped air on the hydraulic or process side of the pump will prevent the pump from working accurately. It will use the displacement to compress and expand air instead of pushing the liquid.

An effective way of eliminating air on the hydraulic side is as follows:

1. Start the pump with all valves on the discharge side open while ensuring the capacity adjuster is at 0%.
2. After running so for 15 minutes, slowly turn the capacity adjuster (micrometer) knob to 100%. Smaller plunger pumps may need to run longer.
3. Add oil through the chimney if you see the oil has dropped below the marking.
4. Turn down the capacity adjuster to 70% for 5-10 minutes and then bring it back up to 100%.

Please visit www.acuflow.com/videos to view a demonstration of the bleeding air procedure.

8.1B Purging air from the process side

It is very important to ensure that there is no trapped air of even the smallest volume on the process side of the pump. Any trapped air on the hydraulic or process side of the pump will prevent the pump from wokring accurately. It will use the displacement to compress and expand air instead of pushing the liquid.

An effective way of eliminating air on the process side is as follows:

1. While you were removing air from the hydraulic side in 8.1A, you had all valves open on the process discharge piping.
2. Run the pump at 100% stroke and 100% speed for 5-10 minutes.
3. Slowly close the Back Pressure Valve to start building pressure.
4. Monitor the pressure on the pressure gauge until it reaches the design pressure.
5. If you do not see the design pressure or the rated flow, open the Back Pressure Valve to let the air out and away.
6. Repeat the opening and closing of the Back Pressure Valve a couple of more time if necessary.
7. If the pump still does not give the rated flow, turn the capacity adjuster (micrometer) knob down to 0%. Then again, slowly increase it back up to 100%.

8.2 Pump calibration

Each pump is tested at the factory prior to shipment to assure proper operation at the capacity and discharge pressure specified. For precise capacity control in the field, a calibration test under actual pumping and piping conditions is recommended. This can be accomplished by allowing the pump to operate at full capacity for a minimum of 30 minutes. This will clear any air out of the pump.

Pump calibration can be accomplished by measuring the decrease in liquid level pumped from a calibration column installed in the suction line as shown in Figure 3 on page 9. Follow the calibration instructions provided by the cylinder manufacturer. An alternate method of calibration for non-hazardous applications is to collect and measure the fluid metered from the pump discharge port into a graduated cylinder or tank.

Typically, test samples are collected at 25%, 50%,75% and 100% capacity settings. A straight line results when these points are plotted on a graph.This graph can then be used for intermediate settings, assuming suction and discharge conditions remain constant.

Use extreme care when performing calibration test using open cylinder or tank method, and be extremely careful when working in the presence of hazardous substances. Wear suitable protective clothing and eyeshielding for protection.

It is important to realize that the samples at 50% will not necessarily be exactly 1/2 of that at 100%, nor will any other sample points be a specific percentage of the 100% value. But, the sample value will lie along a straight line that can be used for intermediate settings, and the pump will give repetitive samples at the same setting. This last characteristic is what makes the AcuFlow® Series 3000 pump effective; it will meter chemicals precisely within ±1% of capacity set point over long periods of time. Also, as operating discharge pressures increase, there are additional hydraulic system losses which are constant for any given discharge pressure.

This results in a small decrease in the maximum capacity output of the pump. All AcuFlow® capacity/pressure charts used for pump selection have a base pressure rating of 100 psig. For higher discharge pressure decrease maximum capacity by 1.25% for every 100 psig increase.

9. Maintenance and repair w/ parts breakdown

Disconnect and lockout power to the pump before performing service or disassembling the pump.

9.1 Preventative Maintenance

The Series 3000 metering pump is designed for continuous service with maximum reliability and minimum downtime. However, good maintenance procedures dictate that certain visual periodic checks be made to assure that operating problems have not developed.

1. Check the hydraulic oil level periodically, to be sure it is at the proper level mark, and adjust as necessary.
2. Inspect the liquid end assembly, including the suction and discharge connections for any indication of leakage, and correct as necessary.
3. Hydraulic oil should be replaced once a year following the procedures outlined under “Oil Change.”

9.2 Recommended spare parts (for metallic liquid end)

To minimize downtime, the following spare parts should be inventoried to support each pump. These spare parts are available in vacuum-sealed packaging, which provides infinite shelf life when properly stored.

(1) Diaphragm
(1) Diaphragm O-Ring
(2) Check Valve Seats
(2) Check Valve Guides
(2) Check Valve Balls
(2) Check Valve O-rings
(1) Drive Lubricant Change
(2) Gear Shaft O-Rings

Note ***1. Multiplex pumps require one (1) Spare Parts Pak for each liquid end.***

9.3 Oil change

1. Under normal operating conditions the hydraulic oil should be drained and replaced once a year. In severe applications the hydraulic oil should be changed more frequently.
2. Drain hydraulic oil using the drain plug on the side of the pump. (For convenience the drain plug can be replaced with a quick draw fitting or valve and short nipple.)

The recommended lubricant for AcuFlow® Series 3000 is Zurn E.P. #95, for normal operation. Various manufacturers’ equivalent oils are listed below:

(Indoor, temperature controlled ambient)

ZURN	EP Lube #EP95
Amoco	Permagear #220
Drydene	E.P. Gear Oil #5
Exxon	Spartan #EP220
Mobil	Mobilgear #630
Shell	Omala #220
Texaco	Meropa #220
ATF	Type F Hydraulic Oil

For applications with different ambient or fluid temperatures, please consult factory for alternate lubricant recommendations.

9.4 Check valves

9.4A Series 3000 check valve replacement - plastic

AcuFlow Series 3000 models with plastic diaphragm heads (whether it is made of PVC or PVDF) have the same internal seat design inside the diaphragm head. Due to the o-rings that are on these seats removal from the diaphragm head can be tricky. The valve seats can be replaced without having to remove the diaphragm head from the pump or draining the oil, and only requires minimal tools.

Refer to sub-assembly drawing on page 15.

The first step is to ensure that the chemical inside the pump has been thoroughly flushed with a neutralizing liquid for your own safety.

DISASSEMBLY AND REASSEMBLY

1. After the pump has been completely flushed with neutralizing liquid, remove the inlet and outlet piping to the pump.
2. Disassemble the check valve by removing the nuts (9001), lockwasher (9002), and studs (9005).
3. You will now be able to see and remove the ball guide (9011) and valve balls (9007).
4. If you need to inspect or change the valve seat (9012), you can twist it out of place. Make sure you locaste and re-install the o-ring (9010).
5. When re-assembling the valve assembly, make sure all components are placed in the locations shown in Drawing 13128.

Caution ***Make sure the check valves are free of any debris.***

9.4B Series 3000 check valve replacement - metallic

AcuFlow’s Series 3000 Metallic liquid end uses 4 different types and check ball sizes of check valve assemblies. The most common is the non-serviceable type which must be replaced as a complete assembly.

REMOVAL AND REPLACEMENT

1. Ensure that the pump is relieved of line pressure.
2. Wear suitable protective clothing and eye shielding for protection.
3. Flush process fluid on the pump with suitable neutralizing agent.
4. Disconnect and lockout electrical power to the pump.
5. Isolate and disconnect the piping on the suction and discharge valves.

(FOR SMALL CHECK VALVES LESS THAN 1” NPT)

6. Remove the valves using a wrench and rotate CCW for the discharge valve and CW for the suction valve.
7. Before installing the new check valves clean the threads on the diaphragm head off any debris or excess sealing compounds.
8. Use thread sealant sparingly. DO NOT APPLY sealant inside the check valves as this could clog and impede in the operation of the check ball.
9. Install the new check valve and tighten accordingly.
10. Reinstall the piping and follow startup procedure.

(FOR LARGE CHECK VALVES GREATER THAN 1” NPT)

6. Unscrew the bolts (3010) to disassemble the check valves.
7. Locate o-rings (3009 and 3013) and make sure they are in good shape before reassembling them in their correct locations.
8. Reassemble and tighten the bolts (3010).

Note

Always wear protective clothing and eye shielding for protection and lockout electrical power to the pump.
Flush out process fluid from the pump and disconnect the piping to the suction and discharge of the pump

Please visit www.acuflow.com/videos to view a full check valve seat replacement.

9.5 Diaphragm replacement

Except in the unlikely event of a loss in integrity, the diaphragm does not require replacement. Should a diaphragm replacement be required, the following steps must be followed:

DISASSEMBLY

1. Wear suitable protective clothing and eyeshielding for protection.
2. Disconnect and lockout electrical power to the pump and drain hydraulic oil.
3. Isolate and disconnect the piping from the suction and discharge check valves.
4. Flush process fluid from liquid end, using a suitable neutralizing agent.
5. Remove the bolts from the liquid end and remove it from the drive housing. Note the orientation of the check valve cartridges prior to removing the diaphragm head, as they must be in the same position when diaphragm head is reassembled.
6. Remove diaphragm, contour plate and support plate; inspect for any obvious damage.

Note

To prevent leakage, never attempt to reuse the old diaphragm.

REASSEMBLY

1. Set oil side contour plate in displacement chamber.
2. Set new diaphragm in head over contour plate.
3. Mount diaphragm head assembly to displacement chamber with bolts. If necessary, hold diaphragm and contour plate in place using a thin, flat, smooth tool such as a machinists' ruler until head is positioned on the displacement chamber.
4. Remove tool carefully while holding head in place.
5. Refill hydraulic system with oil by filling reservoir chamber to recommended level.
6. Reconnect suction and discharge lines.
7. Follow the "Start Up Inspection" procedure as outlined earlier. Run the pump; check for leaks.
8. Return the pump to service.

Please visit www.acuflow.com/videos to view a demonstration of a diaphragm replacement.

9.6 Adjusting the internal relief valve

The internal relief valve is factory set to open at a pressure slightly higher than the discharge pressure indicated on the pump data plate. Never set the value higher than 15% above maximum discharge pressure.

1. Wear suitable protective clothing and eye protection.
2. To access the internal relief valve, remove the oil reservoir cover by loosening the cover screw or turning cover counterclockwise.
3. To adjust relief valve, first operate pump against system operating pressure.
4. Stop pump.
5. Install a pressure gauge, with a range of 50% higher than the desired relief pressure, at the pump discharge connection.
6. Install a shut off valve downstream from the pressure gauge.
7. Open the shut off valve and start pump. Pump process liquid to drain or other safe place to establish proper pumping action.
8. Set pump capacity control at 100%.
9. Close shut off valve, thus "deheading" the pump, and closing watch pressure increase on the pressure gauge. If the pressure exceeds the desired relief setting, quickly open the shut off valve to relieve the pressure in the line.
10. Loosen relief valve adjusting screw by turning counter clockwise in small increments, and repeat step 8 until the maximum gauge reading equals the desired relief valve pressure setting.
11. After setting the relief valve, be certain shut off valve is fully open. Remove pressure gauge and place pump in routine service.

Please visit www.acuflow.com/videos to view a demonstration of an internal relief valve adjustment.

Basic Drive Spare Parts - Cross Section

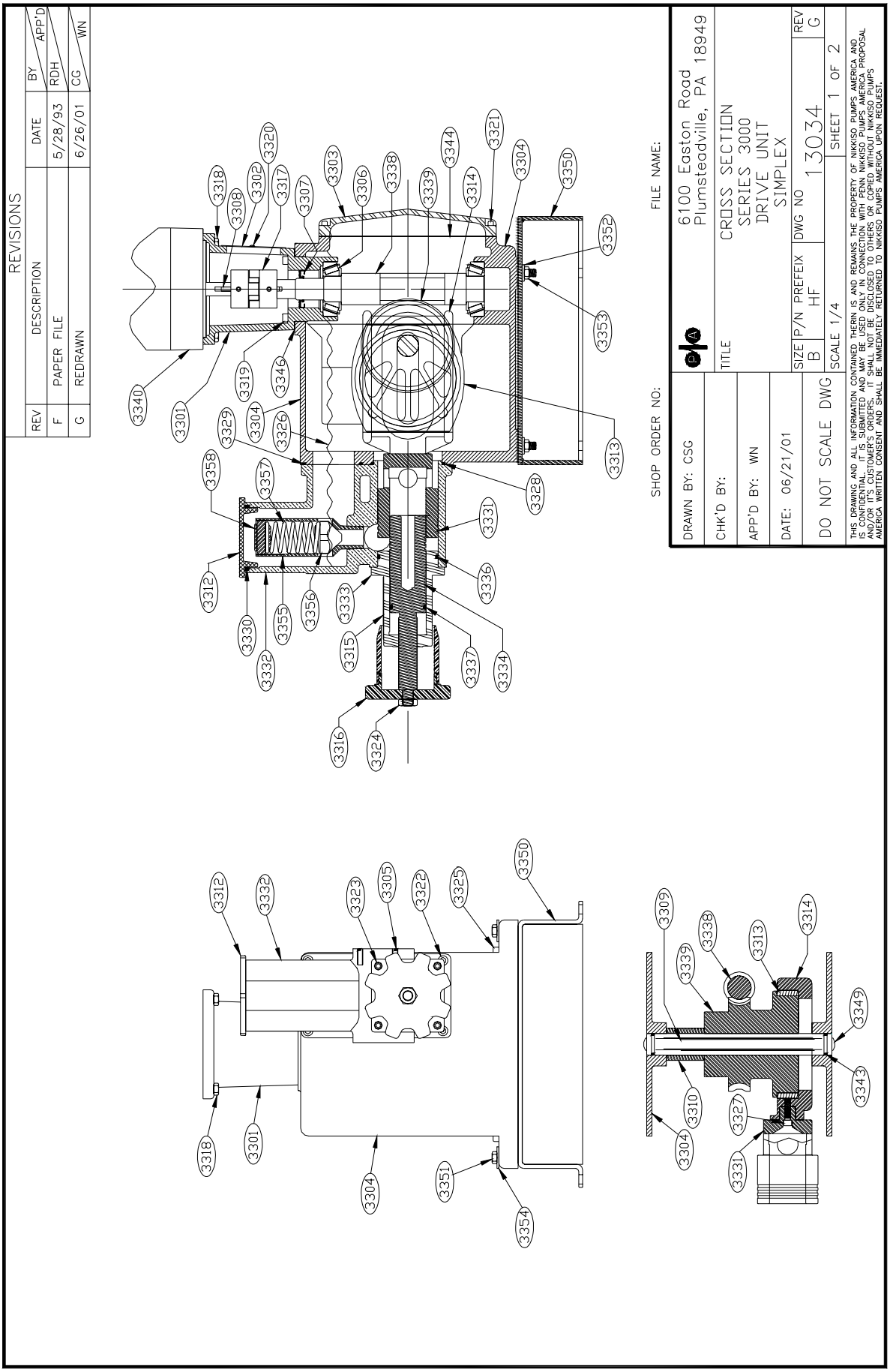

Basic Drive Spare Parts - List

REVISIONS			
REV	DESCRIPTION	DATE	BY / APP'D
H	PARTS LIST CORRECTION SHT. 2	7/10/01	CG / WN

ITEM	QTY	DESCRIPTION
3301	1	ADAPTOR, MOTOR, NEMA C FACE
3302	1	COVER, ADAPTOR
3303	1	COVER, REAR
3304	1	HOUSING, GEAR
3305	1	O-RING, MOUNTING PLATE
3306	2	BEARING, ROLLER
3307	1	OIL SEAL
3308	1	KEY, COUPLING
3309	1	GEARSHAFT
3310	1	SPACER, GEARSHAFT
3312	1	COVER, PRESSURE CHAMBER
3313	1	BEARING, CROSSHEAD
3314	1	CROSSHEAD
3315	1	CAPACITY PLATE
3316	1	HANDWHEEL, MICROMETER
3317	1	COUPLING SET
3318	4	BOLT, MOTOR MOUNTING
3319	4	SCREW, ADAPTOR
3320	2	SCREW, COVER ADAPTOR
3321	8	SCREW, REAR COVER
3322	6	SCREW, PRESSURE CHAMBER

ITEM	QTY	DESCRIPTION
3323	4	SCREW, ADJUSTER HOUSING
3324	1	NUT, CAPACITY ADJUSTER
3325	2	PLUG, OIL DRAIN
3326	2	OIL, HYDRAULIC (GAL)
3327	1	SCREW, PLUNGER
3328	1	O-RING, HOUSING LOWER
3329	1	O-RING, HOUSING UPPER
3330	1	O-RING, COVER CHAMBER
3331	1	PLUNGER
3332	1	CHAMBER, PRESSURE
3333	1	HOUSING, ADJUSTER
3334	1	ADJUSTER
3336	1	O-RING, HOUSING ADJUSTER
3337	1	O-RING, ADJUSTER
3338	1	WORM
3339	1	GEAR
3340	1	MOTOR, NEMA C FACE
3343	2	O-RING, GEARSHAFT
3344	AR	SEALANT, SILICONE
3346	AR	SHIM
3349	2	SCREW, GEARSHAFT

	ITEM	QTY	DESCRIPTION
*	3350	1	BASEPLATE
*	3351	4	BOLT, BASEPLATE
*	3352	4	LOCKWASHER, BASEPLATE
*	3353	4	NUT, BASEPLATE
*	3354	4	WASHER, BASEPLATE
	3355	1	BODY, RELIEF VALVE
	3356	1	POPPET, RELIEF VALVE
	3357	1	SPRING, RELIEF VALVE
	3358	1	ADJUSTER, RELIEF VALVE

* = INCLUDED WHEN PUMP IS EQUIPED WITH NON METALLIC LIQUID END

MODEL AND SERIAL NUMBER REQUIRED WHEN ORDERING PARTS

SHOP ORDER NO: FILE NAME:

DRAWN BY: CSG	6100 Easton Road Plumsteadville, PA 18949
CHK'D BY:	TITLE: CROSS SECTION SERIES 3000 DRIVE UNIT SIMPLEX
APP'D BY: WN	
DATE: 07/01/01	SIZE B / P/N PREFEIX HF / DWG NO 13034 / REV G
DO NOT SCALE DWG	SCALE FULL / SHEET 2 OF 2

THIS DRAWING AND ALL INFORMATION CONTAINED THERIN IS AND REMAINS THE PROPERTY OF NIKKISO PUMPS AMERICA AND IS CONFIDENTIAL. IT IS SUBMITTED AND MAY BE USED ONLY IN CONNECTION WITH PENN NIKKISO PUMPS AMERICA PROPOSAL AND/OR IT'S CUSTOMER'S ORDERS. IT SHALL NOT BE DISCLOSED TO OTHERS OR COPIED WITHOUT NIKKISO PUMPS AMERICA WRITTEN CONSENT AND SHALL BE IMMEDIATELY RETURNED TO NIKKISO PUMPS AMERICA UPON REQUEST.

REVISIONS			
REV	DESCRIPTION	DATE	BY / APP'D
E	REDRAWN	6/29/01	CG / WN
F	PARTS LIST CORRECTION	7/10/01	CG / WN

ITEM	QTY	DESCRIPTION	RECOMMENDED SPARE PTS. *	TORQUE IN LBS
9001	4	NUT		50
9002	4	LOCK WASHER		
9003	4	BOLT, TEE		50
9004	2	YOKE		
9005	2	STUD		
9006	2	O-RING, CONNECTOR	2	
9007	2	BALL	2	
9008	1	TEE		
9009	1	PLATE, TEE		
9010	2	O-RING, SEAT	2	
9011	2	GUIDE, BALL	2	
9012	2	SEAT	2	
9013	2	CONNECTOR	2	
9014	8	BOLT, DIAPHRAGM HEAD		60
9015	1	PLATE, DIAPHRAGM HEAD		
9017	1	DIAPHRAGM	1	
9019	4	BOLT, MOUNTING PLATE		110
9021	1	PLATE, MOUNTING		
9022	1	HEAD, DIAPHRAGM		
9023	1	PLUG, DIAPHRAGM HEAD		
9024	1	O-RING, TEE	1	
9025	1	PLATE, BACK-UP		
2912	1	VALVE, BLEED		
2548	1	O-RING, DIAPHRAGM	1	

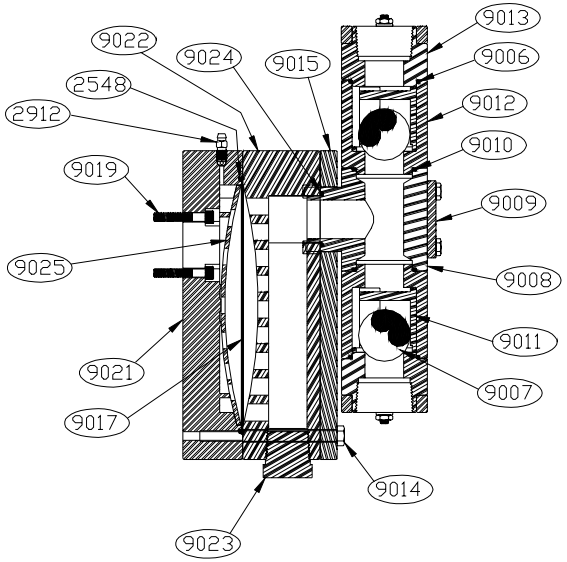

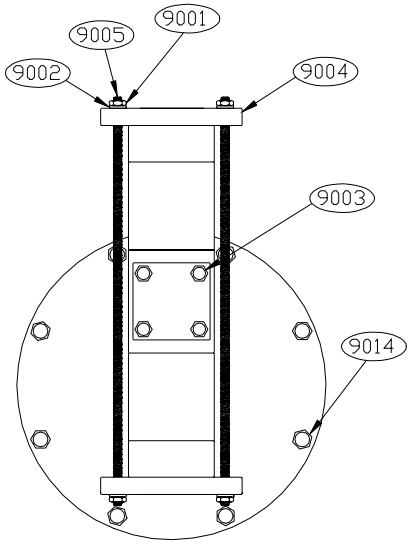

* MODEL AND SERIAL NUMBER REQUIRED WHEN ORDERING SPARE PARTS

SHOP ORDER NO: FILE NAME:

DRAWN BY: CSG
CHK'D BY:
APP'D BY: WN
DATE: 6/29/01
DO NOT SCALE DWG

6100 Easton Road
Plumsteadville, PA 18949

TITLE
CROSS SECTION &
PARTS LIST
NON METALLIC LIQUID END
SERIES 3000 9" HEAD

SIZE	P/N PREFEIX	DWG NO	REV
B	HF	13128	F

SCALE SHEET 1 OF 1

THIS DRAWING AND ALL INFORMATION CONTAINED THERIN IS AND REMAINS THE PROPERTY OF NIKKISO PUMPS AMERICA AND IS CONFIDENTIAL. IT IS SUBMITTED AND MAY BE USED ONLY IN CONNECTION WITH PENN NIKKISO PUMPS AMERICA PROPOSAL AND/OR IT'S CUSTOMER'S ORDERS. IT SHALL NOT BE DISCLOSED TO OTHERS OR COPIED WITHOUT NIKKISO PUMPS AMERICA WRITTEN CONSENT AND SHALL BE IMMEDIATELY RETURNED TO NIKKISO PUMPS AMERICA UPON REQUEST.

Liquid End Double Disc - Plastic

ITEM	QTY	DESCRIPTION
1701	1	SUPPORT PLATE
1703	1	BACKUP PLATE
1704	2	DIAPHRAGM
1705	1	INTERMEDIATE CHAMBER
1706	1	DIAPHRAGM HEAD
1708	1	PLATE, DIAPHRAGM HEAD
1711	1	BLEED PLUG OBSOLETE
1712	1	PLUG, DIAPHRAGM HEAD
1713	4	SCREW, SUPPORT PLATE
1714	2	SCREW, INTERMEDIATE CHAMBER
1715	1	O-RING, TEE
1716	1	TEE
1717	1	PLATE, TEE
1718	2	SEAT
1719	2	O-RING, SEAT
1720	2	BALL GUIDES
1721	2	BALL
1722	2	CONNECTOR
1723	2	O-RING, CONNECTOR
1724	2	YOKE
1725	4	SCREW, TEE
1726	2	STUD
1727	4	LOCKWASHER
1728	4	HEX NUT
1729	8	STUD, DIAPHRAGM HEAD
1730	8	LOCKWASHER
1731	8	HEX NUT
2912	2	BLEED VALVE
2913	1	SCHRADER VALVE
2548	2	O-RING, DIAPHRAGM

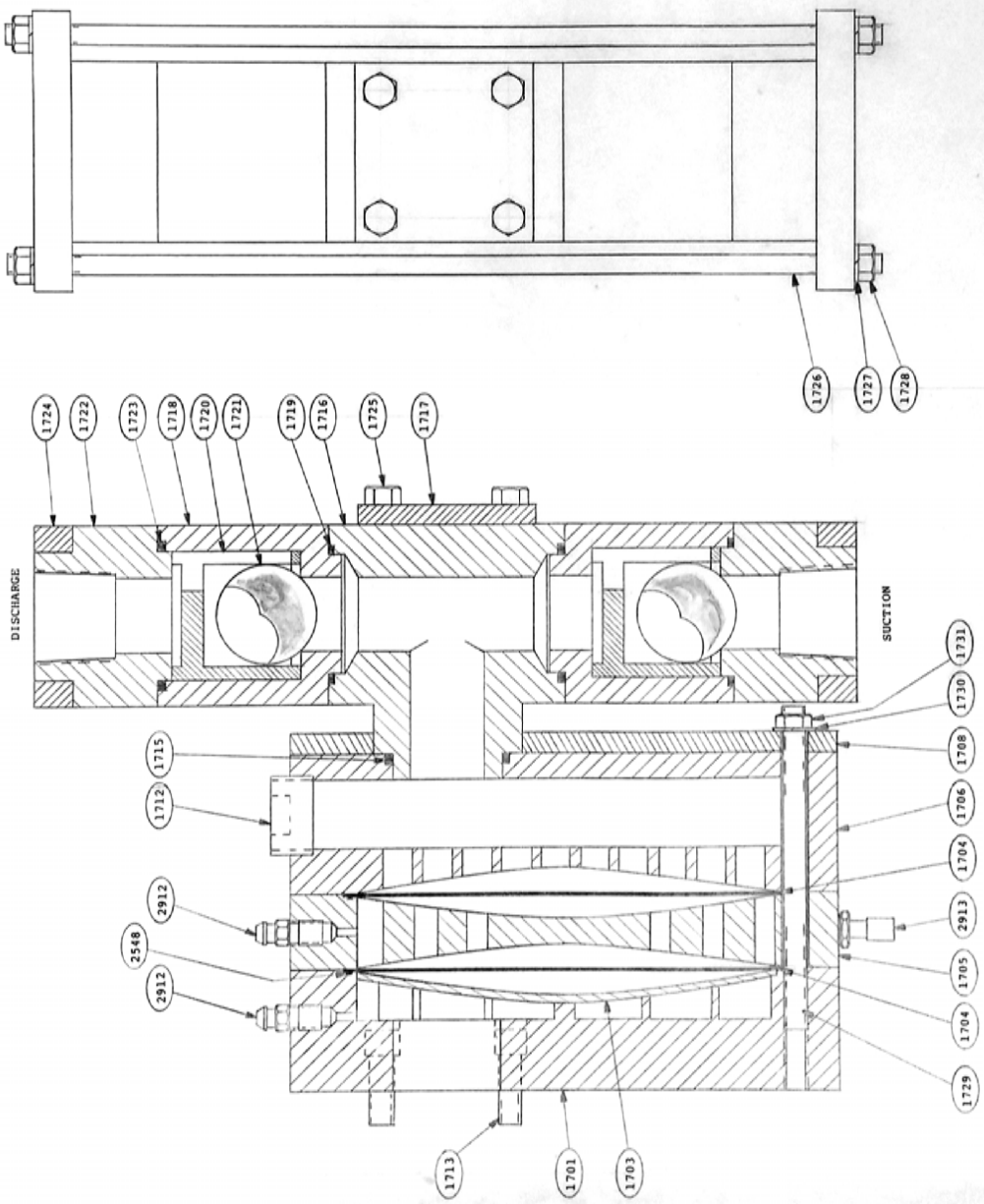

INFORMATION SUBJECT TO CHANGE WITHOUT NOTICE

HYDROFLO CORPORATION
PLUMSTEADVILLE, PA. 18949 USA

PARTS LIST & ASSEMBLY
PLASTIC LIQ. END DOUBLE DISC
SERIES 3000

DRAWING NO. C-13217

REVISIONS			
REV	DESCRIPTION	DATE	BY / APP'D
G	REDRAW	05/31/02	CG / WN

ITEM	QTY	DESCRIPTION	RECOMMENDED SPARE PTS. *	TORQUE IN LBS
2548	1	O-RING, DIAPHRAGM	1	
2912	1	VALVE, BLEED		
3003	8	BOLT, DIAPHRAGM HEAD		300
3004	1	HEAD, DIAPHRAGM		
3005	1	PLATE, CONTOUR		
3006	4	BOLT, TEE		300
3011	1	TEE		
3018	1	O-RING, TEE	1	
3022	2	O-RING, MALE BODY	2	
3023	2	BODY, FEMALE	2	
3025	2	BODY, MALE	2	
3028	2	BALL, CHECK VALVE	2	
3029	2	GUIDE, CHECK VALVE BALL	2	
9017	1	DIAPHRAGM	1	
9019	4	BOLT, MOUNTING PLATE		
9021	1	PLATE, MOUNTING		
9025	1	PLATE, BACK-UP		

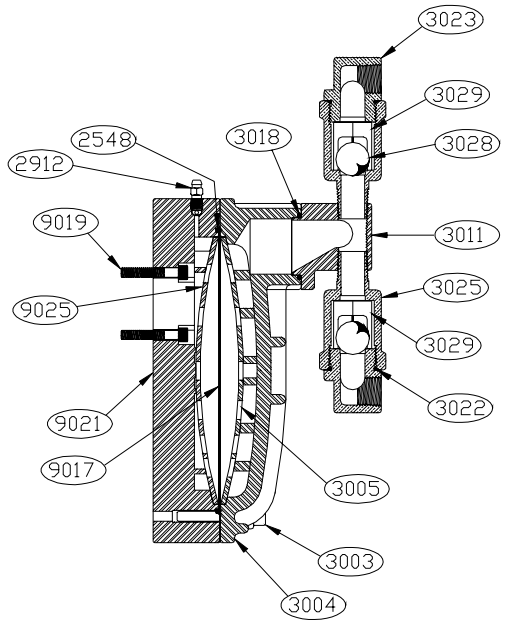

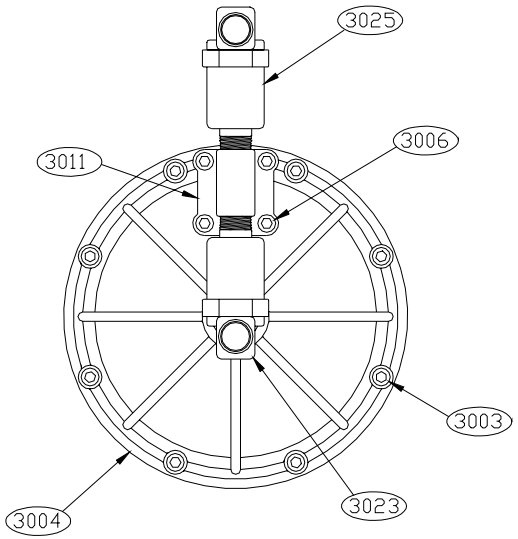

* MODEL AND SERIAL NUMBER REQUIRED WHEN ORDERING SPARE PARTS

SHOP ORDER NO: FILE NAME:

DRAWN BY: CSG	6100 Easton Road Plumsteadville, PA 18949
CHK'D BY:	TITLE CROSS SECTION & PARTS LIST SERIES 3000 9" HEAD METALLIC LIQUID END 7/8 CHECK VALVES
APP'D BY: WN	
DATE: 05/31/02	SIZE B / P/N PREFEIX HF / DWG NO 13132 / REV G
DO NOT SCALE DWG	SCALE / SHEET 1 OF 2

THIS DRAWING AND ALL INFORMATION CONTAINED THERIN IS AND REMAINS THE PROPERTY OF NIKKISO PUMPS AMERICA AND IS CONFIDENTIAL. IT IS SUBMITTED AND MAY BE USED ONLY IN CONNECTION WITH PENN NIKKISO PUMPS AMERICA PROPOSAL AND/OR IT'S CUSTOMER'S ORDERS. IT SHALL NOT BE DISCLOSED TO OTHERS OR COPIED WITHOUT NIKKISO PUMPS AMERICA WRITTEN CONSENT AND SHALL BE IMMEDIATELY RETURNED TO NIKKISO PUMPS AMERICA UPON REQUEST.

Liquid End Spare Parts - Metallic

REVISIONS			
REV	DESCRIPTION	DATE	BY / APP'D
G	REDRAW	05/31/02	CG / WN

ITEM	QTY	DESCRIPTION	RECOMMENDED SPARE PTS. *	TORQUE IN LBS
2548	1	O-RING, DIAPHRAGM	1	
2912	1	VALVE, BLEED		
3003	8	BOLT, DIAPHRAGM HEAD		300
3004	1	HEAD, DIAPHRAGM		
3005	1	PLATE, CONTOUR		
3006	4	BOLT, TEE		300
3008	1	SEAT, SUCTION CHECK VALVE	1	
3009	1	O-RING, SEAT SUCTION CHECK VALVE	1	
3010	4	BOLT, CHECK VALVE BODY		
3011	1	TEE		
3012	2	TRANSITION PIECE / SEAT	1	
3013	4	O-RING, TRANSITION PIECE / SEAT	4	
3014	2	BALL, CHECK VALVE	2	
3015	1	BALL STOP, DISCHARGE CHECK VALVE		
3016	2	BODY, CHECK VALVE		
9017	1	DIAPHRAGM	1	
9019	4	BOLT, MOUNTING PLATE		
9021	1	PLATE, MOUNTING		
9025	1	PLATE, BACK-UP		

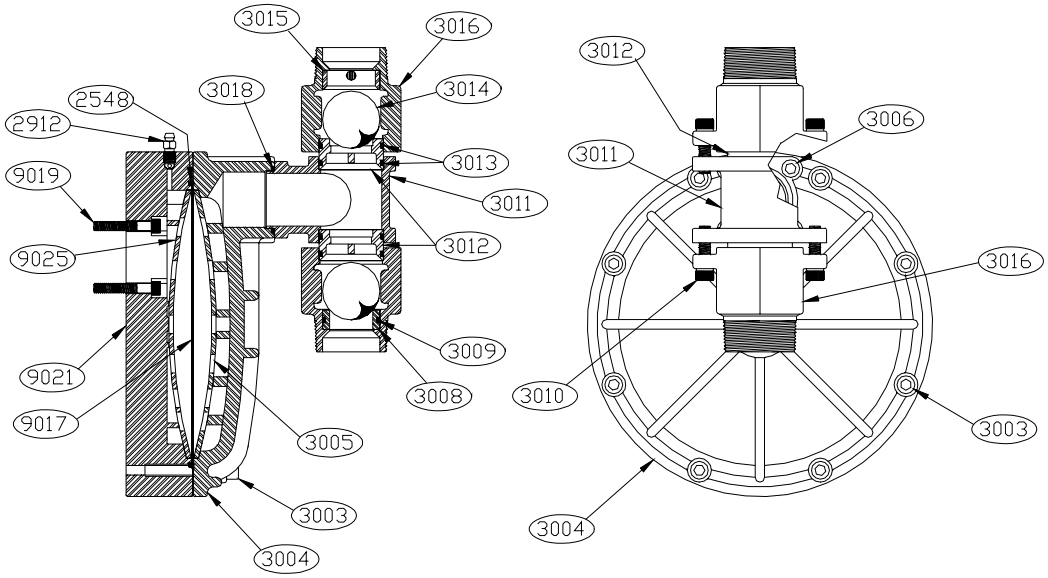

MODEL AND SERIAL NUMBER REQUIRED WHEN ORDERING SPARE PARTS

SHOP ORDER NO: FILE NAME:

DRAWN BY: CSG

CHK'D BY:

APP'D BY: WN

DATE: 05/31/02

DO NOT SCALE DWG

6100 Easton Road
Plumsteadville, PA 18949

TITLE CROSS SECTION & PARTS LIST
SERIES 3000 9" HEAD
METALLIC LIQUID END
1-1/4 & 1-1/2 CHECK VALVES

SIZE	P/N PREFEIX	DWG NO	REV
B	HF	13132	G

SCALE SHEET 2 OF 2

THIS DRAWING AND ALL INFORMATION CONTAINED THERIN IS AND REMAINS THE PROPERTY OF NIKKISO PUMPS AMERICA AND IS CONFIDENTIAL. IT IS SUBMITTED AND MAY BE USED ONLY IN CONNECTION WITH PENN NIKKISO PUMPS AMERICA PROPOSAL AND/OR IT'S CUSTOMER'S ORDERS. IT SHALL NOT BE DISCLOSED TO OTHERS OR COPIED WITHOUT NIKKISO PUMPS AMERICA WRITTEN CONSENT AND SHALL BE IMMEDIATELY RETURNED TO NIKKISO PUMPS AMERICA UPON REQUEST.

Liquid End Spare Parts

ITEM	QTY	DESCRIPTION
0600	1	DIAPHRAGM
0601	1	SUPPORT PLATE
*0602	1	DIAPHRAGM HEAD
0603	1	BACK-UP PLATE
*0604	1	CONTOUR PLATE
0605	4	SCREW, SUPPORT PLATE
0606	8	SCREW, DIAPHRAGM HEAD
*0607	2	VALVE BODY, FEMALE
*0608	2	VALVE BODY, MALE
*0609	2	O-RING, VALVE BODY
*0610	2	BALL GUIDES
*0611	2	BALL
0612	1	O-RING, DIAPHRAGM

NOTE: * = MATERIAL VARIABLE

PUMP MODEL & SERIAL NUMBER REQUIRED TO ACCURATELY SPECIFY PARTS

INFORMATION SUBJECT TO CHANGE WITHOUT NOTICE

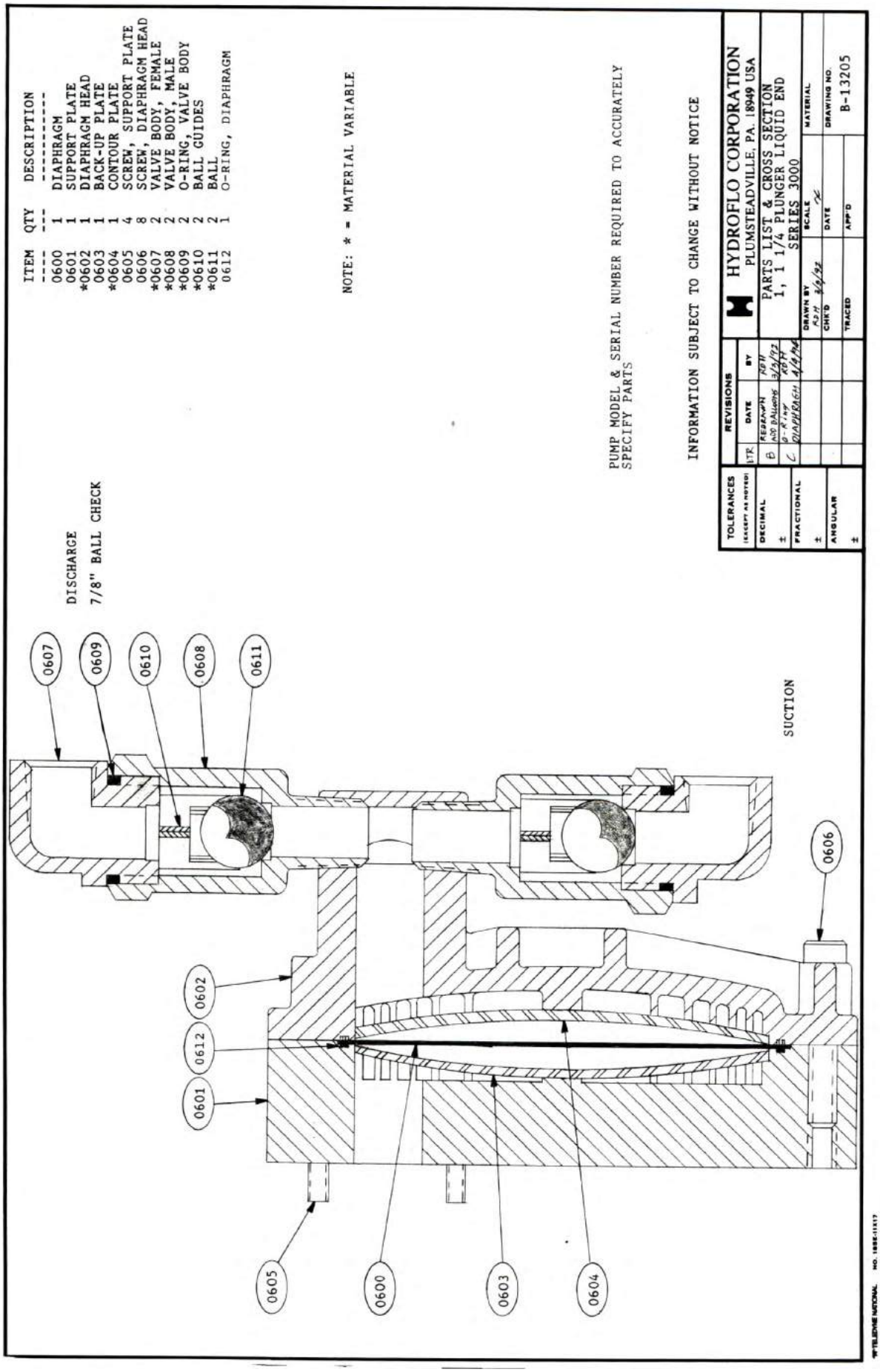

Double Disc Diaphragm Liquid End Spare Parts

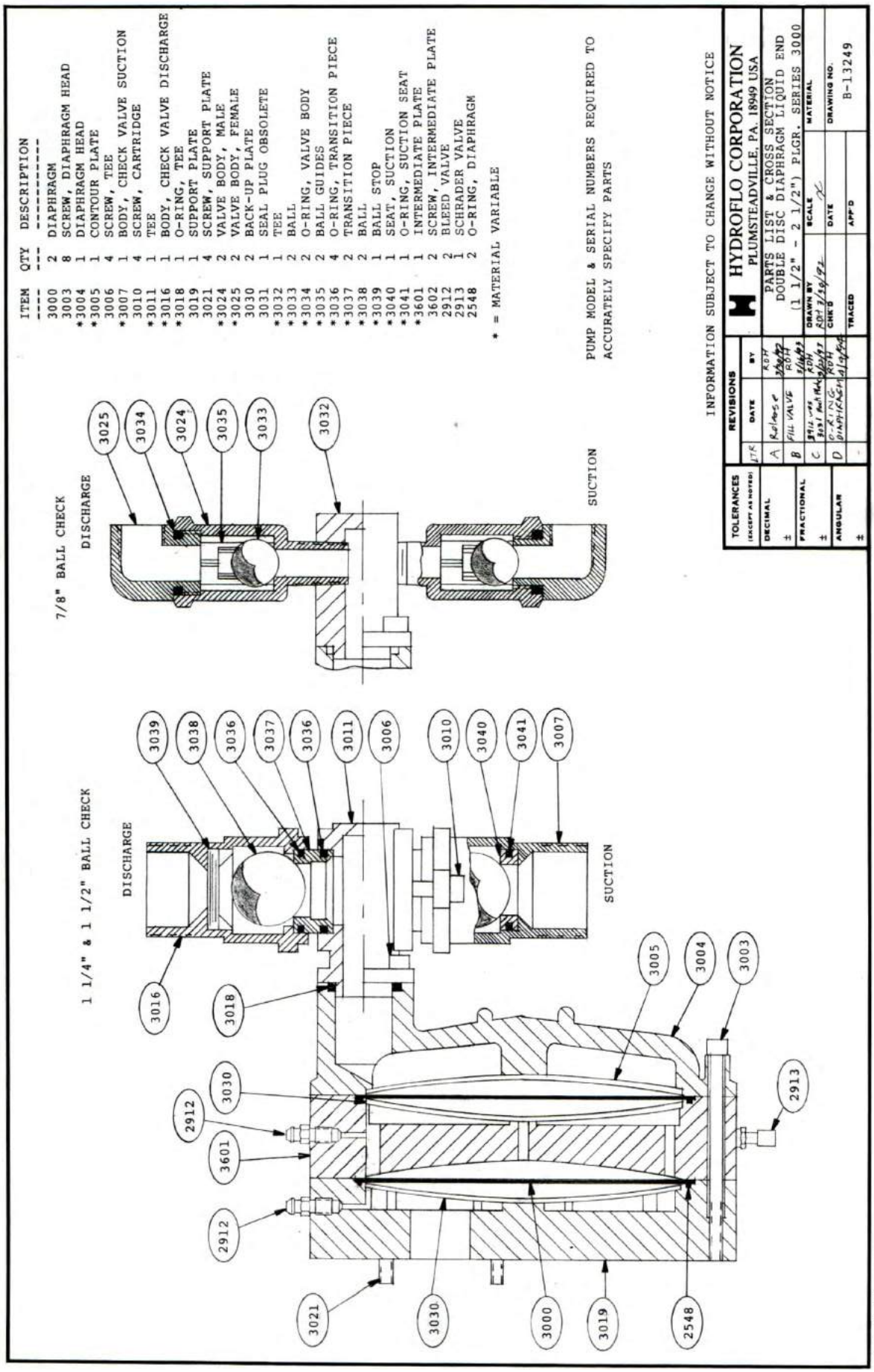

ITEM	QTY	DESCRIPTION
3000	2	DIAPHRAGM
3003	8	SCREW, DIAPHRAGM HEAD
*3004	1	DIAPHRAGM HEAD
*3005	1	CONTOUR PLATE
3006	4	SCREW, TEE
*3007	1	BODY, CHECK VALVE SUCTION
3010	4	SCREW, CARTRIDGE
*3011	1	TEE
*3016	1	BODY, CHECK VALVE DISCHARGE
*3018	1	O-RING, TEE
3019	1	SUPPORT PLATE
3021	4	SCREW, SUPPORT PLATE
*3024	2	VALVE BODY, MALE
*3025	2	VALVE BODY, FEMALE
3030	2	BACK-UP PLATE
3031	1	SEAL PLUG OBSOLETE
*3032	1	TEE
*3033	2	BALL
*3034	2	O-RING, VALVE BODY
*3035	2	BALL GUIDES
*3036	4	O-RING, TRANSITION PIECE
*3037	2	TRANSITION PIECE
*3038	2	BALL
*3039	1	BALL STOP
*3040	1	SEAT, SUCTION
*3041	1	O-RING, SUCTION SEAT
*3601	1	INTERMEDIATE PLATE
3602	2	SCREW, INTERMEDIATE PLATE
2912	2	BLEED VALVE
2913	1	SCHRADER VALVE
2548	2	O-RING, DIAPHRAGM

* = MATERIAL VARIABLE

PUMP MODEL & SERIAL NUMBERS REQUIRED TO ACCURATELY SPECIFY PARTS

Pump Troubleshooting Chart

The following charts cover common problems, probable cause and remedies as related to metering pump operation, and will serve as a basis to help isolate and remedy these problems. Each section lists probable causes and remedies in systematic order of probability.

IMPORTANT NOTE: The single most important cause of hydraulic diaphragm pumps not performing or under-performing is the entrapment of air, either on the hydraulic oil side or process liquid side or both. Please make sure that the last tiny bubbles of air are purged from both sides. THIS PROBLEM IS ESPECIALLY CRITICAL IN SMALL FLOW PUMPS.

	PROBABLE CAUSE	REMEDIES
Most problems that arise during or shortly after startup are a result of improper pump installation. Each AcuFlow pump is tested and in good working order when shipped. Before making adjustments to, or disassembling any part of the pump, check the following.	1. Insufficient hydraulic oil. 2. Clogged or blocked ball check valves, or check valves held open by solids. 3. Clogged/blocked suction strainer. 4. System discharge pressure greater than pump relief valve setting. 5. Starved suction.	1. Fill to proper level. 2. Clean or replace (suction line not flushed prior to connecting pump, permitting debris to enter and block ball check valves. 3. Clean or replace. 4. Reset internal relief valve within pump rating. 5. Insufficient $NPSH_A$. Shorten suction piping; increase suction pipe size; increase suction head.
Pump motor fails to start.	1. Blown fuse or tripped breaker. 2. Open thermal overload. 3. Low line voltage. 4. Open circuit in limit switches, timers or other control devices in pump motor starter circuit. 5. Motor damage.	1. Replace fuse after correcting cause of overload. 2. Reset after correcting cause of overload; check heater size. 3. Determine cause and correct. 4. Reset. 5. Check motor for physical damage that may hinder operation.
Pump runs but fails to deliver.	*Please read IMPORTANT NOTE first before proceeding. 1. Insufficient hydraulic oil. 2. Check valve(s) lodged open by solids. 3. Worn or dirty ball check valves. 4. Suction or discharge line blocked. 5. Isolation valve closed. 6. Pump is not primed. 7. Check valves installed incorrectly. 8. Solids build-up between diaphragm and contour plate, limiting diaphragm movement.	1. Fill to proper level. 2. Clean or replace. 3. Clean or replace. 4. Clean line. 5. Open valve. 6. Allow suction line and pump head to fill with liquid before pumping against pressure. 7. Remove and reinstall correctly. 8. Remove and clean liquid end, replace diaphragm. An infrequent occurrence when pumping fluid that contains particles that settle out. (A tubular diaphragm liquid end recommended.)

	PROBABLE CAUSE	REMEDIES
Pump fails to deliver rated capacity.	*Please read IMPORTANT NOTE first before proceeding. 1. Incorrect capacity setting. 2. Insufficient hydraulic oil. 3. Starved suction. 4. Internal or external relief valve set too low for system conditions. 5. Leaky suction piping. 6. Excessive suction lift. 7. Fluid close to boiling point. 8. Fluid viscosity too high. 9. Worn or dirty ball check valves.	1. Readjust capacity setting. 2. Fill to proper level. 3. Increase suction piping size or increase suction head. 4. Reset valve to correct setting. 5. Repair piping. 6. Decrease lift. 7. Cool liquid; increase suction head. 8. Reduce viscosity of fluid; change ball material; increase ball size. 9. Clean or replace.
Pump operates erratically.	*Please read IMPORTANT NOTE first before proceeding. 1. Clogged/dirty suction strainer. 2. Insufficient hydraulic oil. 3. Leak in suction piping. 4. Internal external relief valve is relieving 5. Insufficient suction pressure. 6. Worn or dirty ball check valves. 7. Fluid too close to boiling point. 8. Fluid viscosity too high.	1. Clean strainer. 2. Fill to proper level. 3. Repair piping. 4. Reset relief valve. 5. Raise tank fluid level. 6. Clean or replace. 7. Cool fluid or increase suction head. 8. Reduce viscosity of fluid; change ball material; increase ball size.
Pump delivers too much capacity.	1. Insufficient discharge pressure. 2. Too much suction pressure.	Increase discharge pressure (pump discharge pressure must be 25-30 psig greater than suction pressure to assure proper ball check valve operation).
Noisy operation.	Ball check valves. 1. Excessive gear wear. 2. Improper lubrication. 3. Worn bearings.	Ball valves makes a clicking sound as they operate - rattling noises may also be heard. Under certain conditions these noises are amplified by the natural resonance of piping. These noises are normal and should not cause concern. 1. Replace gear set. 2. Replace with correct oil. 3. Replace bearings.
Motor overheats.	1. Motor overloaded - pump operating in excess of discharge pressure rating. 2. Improper wiring or low voltage. 3. Hydraulic oil too viscous. 4. High ambient temperature.	1. Limit discharge pressure to the maximum pressure specified. 2. Check power supply. 3. Drain/refill with correct oil. 4. Increase ventilation or relocate pump.
Pump leaking oil.	1. Oil drain plug loose. 2. Pump overfilled with hydraulic oil. 3. Diaphragm head bolts loose.	1. Tighten. 2. Drain oil to proper level. 3. Tighten to specifications.
Pump losing oil. Hydraulic oil discolored.	Ruptured diaphragm.	Replace diaphragm after correcting cause of failure. Hydraulic oil must be discarded and the pump gearbox thoroughly flushed of all traces of process fluid. Replace with fresh hydraulic oil.