AcuFlow

Metering Pumps & Systems

The Legendary Brand in Metering Pumps

Formerly Known as **HYDROFLO**

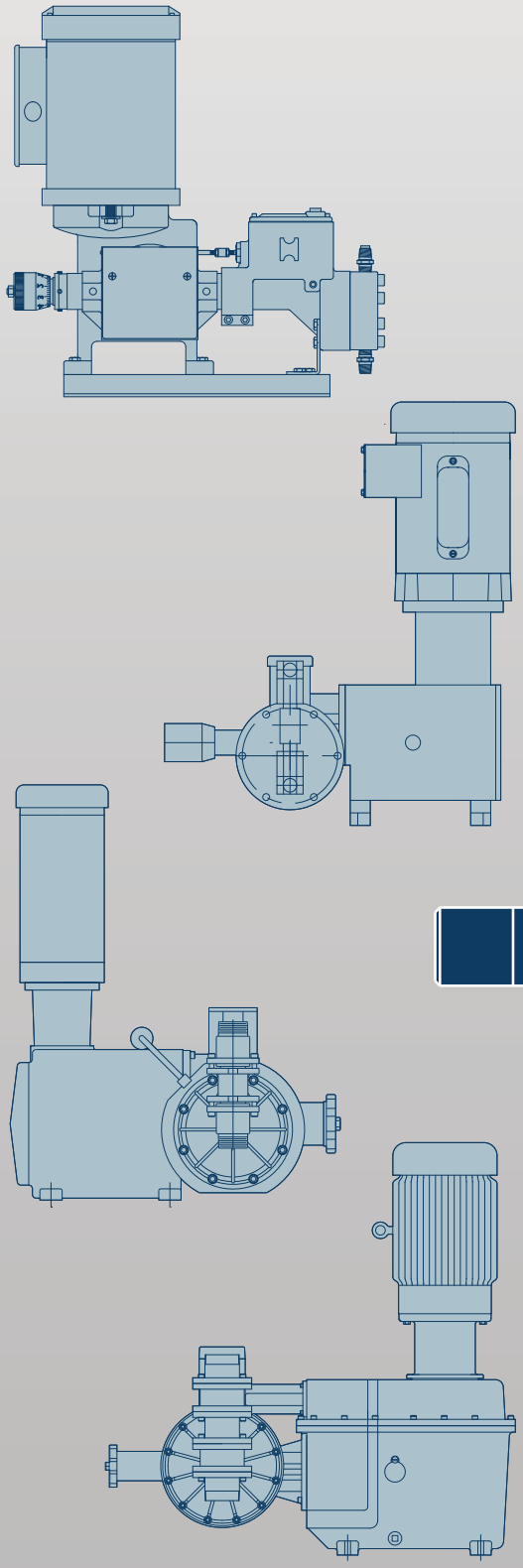

Complies with API 675 Standards

Manufactured in the USA

FOCUS:

Our role in sustaining the human race on this planet is evident from our contributions in three critical sectors: Water, Food, and Energy production. These sectors require our pumps and controllers to maximize yield and reduce environmental impact. Chemicals are integral to this effort in all three sectors. By providing equipment that handles these chemicals, we not only contribute to increasing productivity but also play an important role in the safe disposal of these chemicals after use, minimizing their impact on the environment.

VISION:

Our goal is to ease the jobs of people involved in the production of water, food and energy worldwide by providing innovative products in a timely manner and help minimize environmental impact.

Any tool used by man needs to perform when and where needed and stay out of mind when it is not. This simple but powerful statement requires many aspects to come together if it is to be implemented in daily life. A pump, for instance,needs to be ready to perform at the time it is expected and at the place it is supposed to perform. The person using the pump may not have this at the top of their mind all the time unless it either fails to show up on time or move chemicals when needed.

At AcuFlow, we strive to ensure that customers never have to worry about the pumps they purchase from us. They can be confident that our sales team has selected the right product, our operations team has produced a high-quality product delivered on time, and our support team will be available anytime it is needed. All this begins with bringing the right team on board. Through supportive and respectful training, we empower our team, when and where needed, to do what is best for our customers.

MISSION:

Enable and facilitate the efficient use and safe disposal of chemicals in industrial, agricultural and commercial processes by providing pumps and controls that are precise, dependable and safe. Exceed customer expectations of timely delivery, performance, and support with agility and responsiveness to meet changing demands. Recognize that our team members are the only ones that can achieve this mission and each one deserves respect and appreciation.

A CASE FOR ACUFLOW:

AcuFlow is a manufacturing company that prides itself on making its products in the USA with a small and agile footprint in California. We have an adaptive facility with processes to accommodate customization and quick lead times. With our history of continuous improvement and delivering high-quality pumps since 1972, we have a track record and reputation that is the envy of the pump marketplace. Please refer to our history at the top of the next page, where we list significant events chronologically.

FOLLOWING IS THE LIST OF SOME OF THE COMPETITIVE STRENGTHS WE OFFER:

- **Reputation for Quality and Dependability spanning over 46 years**
- **Nimble and Responsive manufacturing process**
- **Fastest lead times in the industry**
- **Robust design that can withstand most demanding environments**
- **Customized solutions for specific applications and complete skid assemblies**

METERING PUMP AND CHEMICAL HANDLING EXPERTISE:

The pump design has been perfected by proactively seeking customer input with the humility to acknowledge that they are the experts when it comes to their application where our pumps are used. This philosophy has resulted in a pump that never fails and lives up to the expectations of the most demanding customers running the most complex processes. Our engineers have been trained to believe that the most effective ideas for improving our pumps come from listening to our customers who can be our harshest critics and our most generous admirers.

We are constantly engaged in improvement efforts to bring the benefits of the latest developments in materials or manufacturing technology. Everyone, including assemblers, testers, and engineers, is involved in product reviews where the ideas collected are tested for feasibility before being incorporated in the final pump design.

CUSTOMER CENTRIC PROCESSES AND ATTITUDE:

AcuFlow metering pumps have one of the largest range of flows, pressures and materials. Our large inventory allows us to keep our production line primed to make any pump quickly without compromising on quality. AcuFlow's unique modular assembly process along with Kanban inventory management helps us achieve outputs that exceed facilities with a larger footprint. Our customer support and sales team are trained to be the experts in their areas of responsibility. The customer experience starting from the selection of the pump to installation and service exceeds expectations of even the most demanding of customers

HISTORY

1972

Mr. John Klembeth launches HydroFlo with a revolutionary pump design.

1983

HydroFlo relocates to a larger facility in Plumsteadville, PA.

1996

PennProcess TECHNOLOGIES

PennProcess Technologies acquires HydroFlo Corp.

PUMP CUTAWAY

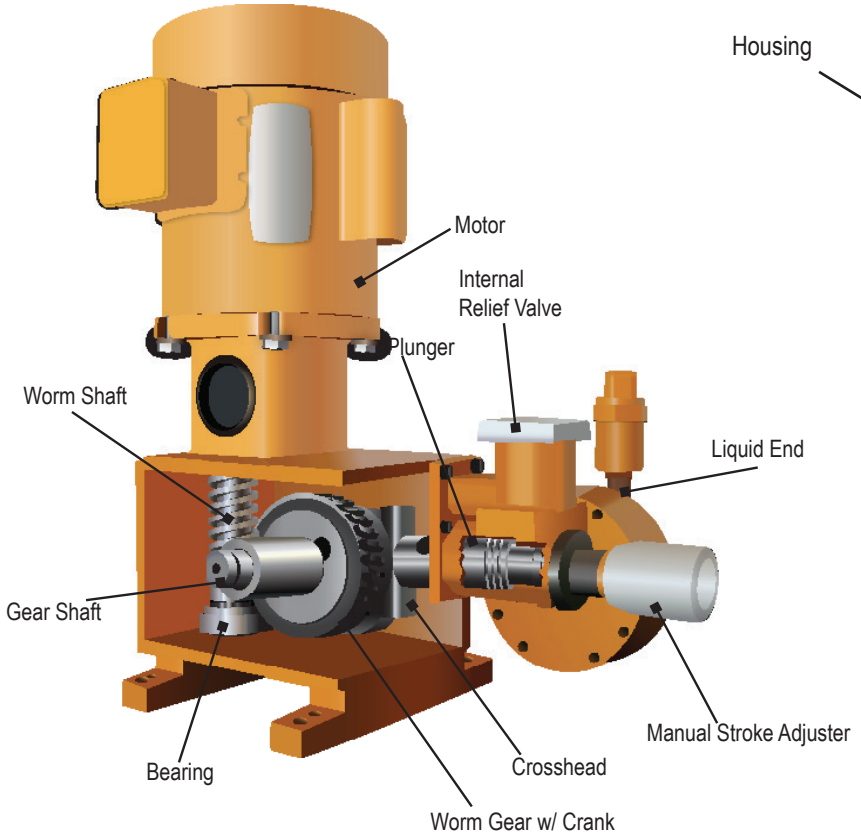

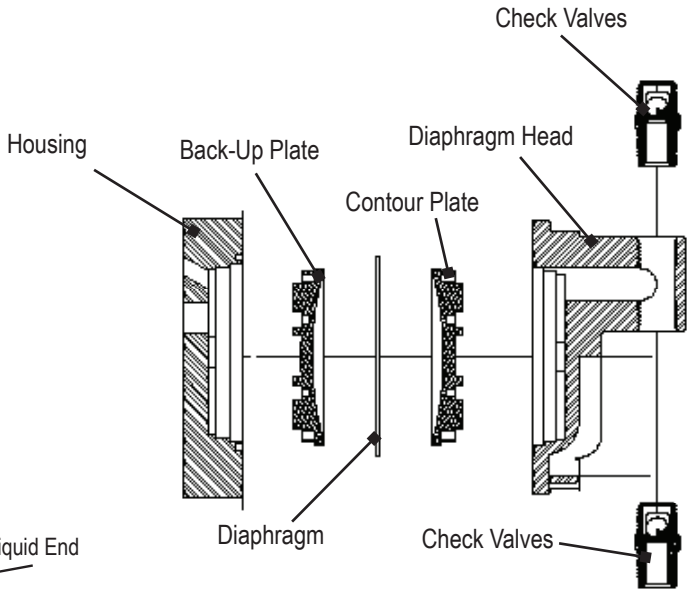

Liquid End Cross Section*

*Shown: Series 1000 (Metallic, 3/8" NPTM).
See next page for more liquid ends.

Flow Capacity Range - From Very Low to Very High

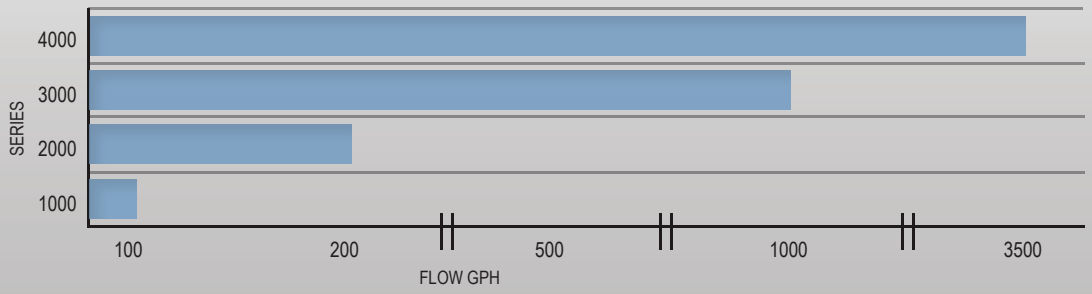

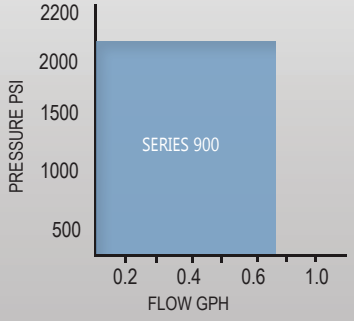

AcuFlow Ultra - Low Capacity Pumps

2001

Nikkiso buys HydroFlo to use as a launch pad for its own products in the USA.

2007

Precision Flow Technologies Inc. acquires the HydroFlo line. Relocates to California and relaunches as AcuFlow.

2011

AcuFlow moves to a larger state of the art facility in Irvine, CA.

HYDRAULICALLY BALANCED DIAPHRAGMS

There are several metering pump designs that are available today. The Hydraulic Diaphragm design is the most evolved version which offers several advantages over other types. The following are some points to consider while choosing between different types based on your application.

Piston Plunger

- Metallic piston in contact with process fluid
- Piston/Plunger packing exposed to process fluid
- Contamination with grease/lubricant

Solenoid Diaphragm

- Unbalanced diaphragm stern failure
- Works only for light duty low pressure applications
- Low durability design

Mechanical Diaphragm

- Unbalanced diaphragm - frequent replacements
- Not suitable for high pressure
- Less accurate due to rolling diaphragm

Hydraulic Diaphragm Advantages

- Run by hydraulic oil which is non-compressible
- Balanced pressure on both sides to increase life
- Virtually maintenance-free for years
- Built-in safety features - Internal relief valve

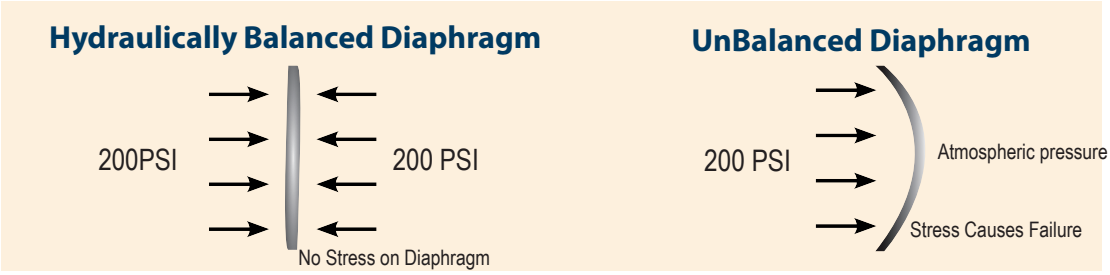

Liquid End Cross Sections - Metallic

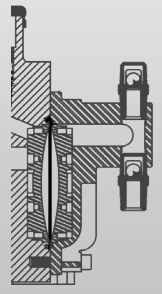

Series 1000

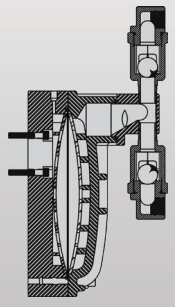

Series 2000 & 3000, 1/2” FNPT

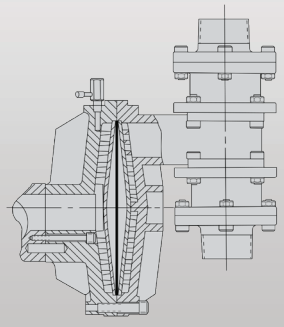

Series 4000, 2-1/2” MNPT

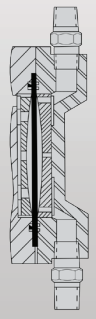

Series 900, 1/4” MNPT

MARKETS & APPLICATIONS

Water & Wastewater Treatment

AcuFlow water treatment pumps are engineered for injecting disinfectant chemicals, acids, polymers, and other agents used in water treatment facilities. Wastewater treatment pumps are used for injecting chemicals for the removal of caustic and cyanide, pH control, and more.

TYPICAL APPLICATIONS (WATER)

- Sodium hypochlorite and calcium hypochlorite for disinfection
- Sulfuric acid and sodium silicate
- Alum or sodium aluminate as a coagulant agent
- Slurries for filtration
- Phosphate for red water control
- Lime slurries for softening and pH control
- Potassium permanganate for manganese and iron removal
- Polymers for primary coagulation
- Metering activated carbon slurries for taste and odor control

TYPICAL APPLICATIONS (WASTEWATER)

- Sodium hypochlorite for disinfection
- Lime slurries for pH control (corrosion control) and coagulation
- Ferric chloride and alum injection for coagulation
- Copper sulfate injection for algae control
- Activated carbon or diatomaceous earth slurries for odor and color control
- Caustic soda (NaOH) for metal removal, pH control, and cyanide removal
- Anionic and cationic polymer injection for phosphate removal, coagulation and filtration

Agriculture

Used for agricultural fertigation and chemigation, AcuFlow agriculture pumps inject fertilizers and other chemicals into agricultural irrigation pipelines.

TYPICAL APPLICATIONS

- Fertigation - injecting fertilizers and other chemicals in the irrigation water pipelines.
- Chemigation - Injecting pesticides and insecticides to protect crops
- Acid Pumping for pH adjustment
- Chlorine Pumping for disinfecting water

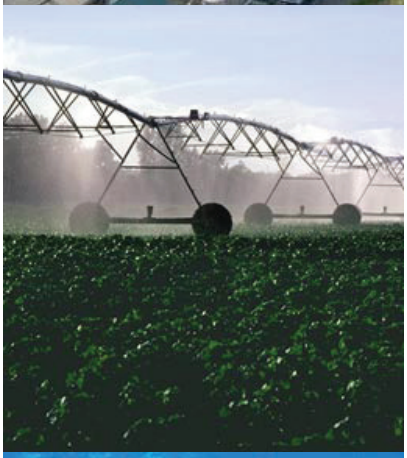

Oil & Gas

AcuFlow oil and gas industry pump systems are specially engineered to handle industrial oil and gas requirements for injecting corrosion inhibitors, pH adjustment agents for corrosion control, chemical desalting of crude oil, introducing lubricants for gas lines, etc.

TYPICAL APPLICATIONS

- Injecting corrosion inhibitors
- Pumping chemicals to adjust the pH of sour gas or crude oil to reduce corrosion
- Injecting sludge inhibitors for fuel oils
- Pumping additives for bacteria control in water for well flooding
- Caustic soda to crude oils or soured gasoline for rerun through cracking stills
- Sampling feedstocks, jet fuels, gasolines, and intermediates for analysis

Chemical Processing

Used in a wide variety of chemical processing pump applications, AcuFlow chemical processing pumps are commonly used to introduce aromatics, ethanolamines, ethylene glycols, and other chemicals required in industrial manufacturing and processing environments.

TYPICAL APPLICATIONS

- Ethers, Aromatics (Toluene, Paraxylene, Benzene, and Orthoxylene)
- Ethylene glycols for manufacturing plastics, textiles, latex paints, adhesives, etc.
- Propylene oxide, Vinyl monomers, Deionized water, Methanol, Sodium tetraborate (Borax) solutions, Tetrahydrofuran, Alumina catalyst solutions

TYPICAL APPLICATIONS (DISTILLERIES)

- Water conditioning for the product
- Metering acid during mashing for pH control of brewing water
- Handling filter aids (diatomaceous earth)
- Dispensing aging chemicals
- Adding froth inhibitor at bottle filling machine
- Pumping sulfuric acid

TYPICAL APPLICATIONS (FOOD & DAIRY)

- Mixing ingredients in manufacture of mustard, mayonnaise, and salad dressings
- Coating and flavoring to dry cereals
- Adding oil to peanuts
- Adding preservatives
- Adding flavoring oils to flour, cake, and pie mixes
- Metering vitamins to many food products, including milk
- Metering ingredients and vitamins to both pet and cattle feed
- Pumping hormones to animal feed

Food Processing

Food grade pumps that are used in food and beverage manufacturing plants for pumping compounds, ingredients, candy coating and flavors.

TYPICAL APPLICATIONS

- Spray Fire resistive coating on steel

Fire Proofing

Steel structures in buildings are vulnerable to high temperatures from a long fire. Our pumps are used to coat the steel by spraying the sensitive material.

TYPICAL APPLICATIONS

- Adding sulfuric acid or alum for pH control of pulp
- Adding colorants
- Metering coagulants
- Adding kaolin slurries as paper filler
- Introducing titanium dioxide to pulp for opacity control in thin papers

Pulp & Paper

Pulp & Paper industry pumps for addition of sulfuric acid or alum for pH control, adding colorants, kaolin slurries, titanium dioxide, etc.

TYPICAL APPLICATIONS

- Additives for pH adjustment of the ore
- Handling liquified metals
- Dust control spraying
- Metering depressing agents
- Pumping caustic soda (sodium hydroxide) for neutralizing
- Metering various leaching chemicals – solvent extraction
- Flotation control

Miscellaneous

Other pumps can be used in applications such as mining, fireproofing, chemical spraying, boiler feed applications, car washes, laundry facilities, and more.

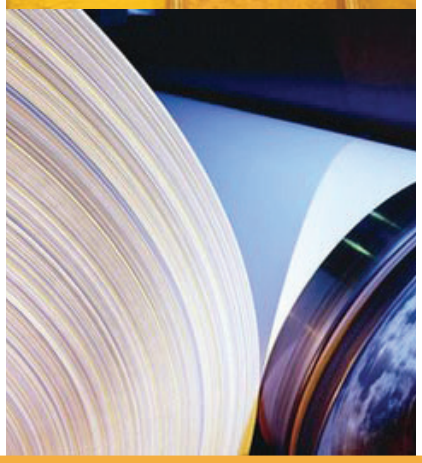

SERIES 1000

1000 SERIES

Features

- Flow capacities up to 123 GPH (Duplex)
- Pressure up to 3,000 PSI
- Unibody Design - Less Parts
- Metering Accuracy +/- 1%
- Easy capacity controls - Manual/Auto
- Built-in Safety - Internal Relieve Valve
- Available in Duplex to double flow capacity
- Ability to handle difficult liquids like slurries, off-gassing, and high viscosity liquids

Specifications

Flow capacity adjustment: 0-100%
While the pump is **running** or **stopped**

Turndown Ratio
Stroke length - 10:1
Stroke frequency - 10:1
Combined - 100:1

Metering Accuracy
Steady state: +/- 1%
Linearity: +/- 1%
Combined: +/- 1%

Maximum process fluid temperature
Custom engineered metallic liquid end: 500°F (260°C)
Metallic liquid end/PTFE diaphragm: 250°F (121°C)
Plastic head: 140°F (60°C)

Hydraulic Oil
Oil capacity: 2 qt. (simplex)
3 qt. (duplex)

Plunger Stroke
Stroke length: 3/4”

Displacement per stroke - by plunger size
3/8” - 0.0857 cu. in. (1.353 mL)
9/16” - 0.18595 cu. in. (3.047 mL)
3/4” - 0.33073 cu. in. (5.419 mL)
7/8” - 0.450246 cu. in. (7.378 mL)
1-1/8” - 0.78649 cu. in. (12.888 mL)
1-5/8” - 1.5537 cu. in. (25.461 mL)

Liquid End Material Options
316 SS, Alloy 20, Hastelloy C, PVC, PVDF and Acrylic

Cross Section

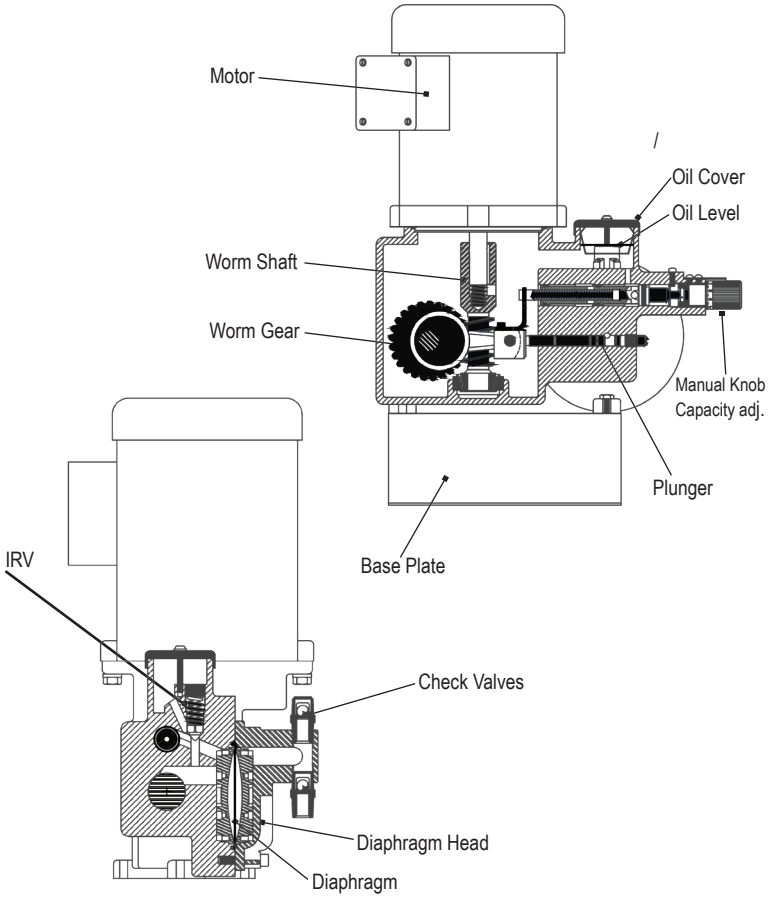

Performance Table

Pump Model Number	Capacity GPH (LPH)	Pressure PSI (bars)	Speed SPM	Plunger Diameter	Connection (Metallic - NPT)
CA4T 3829-0X013	0.55 (2.1)	3000 (206)	29	3/8"	1/4"
CA4T 3858-0X013	1.10 (4.2)		58		
CA4T 3897-0X013	1.85 (7.0)		97		
CA4T 3812-0X013	2.25 (8.5)		117		
CA4T 3814-0X013	2.70 (10.2)		140		
CA4T 3817-0X013	3.28 (12.4)		170		
CJ4T 5629-0X014	1.25 (4.7)	2,000 (137)	29	9/16"	3/8"
CJ4T 5658-0X014	2.50 (9.5)		58		
CJ4T 5697-0X014	4.20 (15.9)		97		
CJ4T 5612-0X014	5.25 (19.87)		117		
CJ4T 5614-0X014	6.09 (23.1)		140		
CJ4T 5617-0X014	7.40 (28.0)		170		
CJ4T 7529-0X014	2.25 (8.5)	1,100 (75)	29	3/4"	3/8"
CJ4T 7558-0X014	4.50 (17.1)		58		
CJ4T 7597-0X014	7.50 (28.4)		97		
CJ4T 7512-0X014	9.05 (34.3)		117		
CJ4T 7514-0X014	10.80 (40.9)		140		
CJ4T 7517-0X014	13.28 (50.27)		170		
CJ4T 8729-0X014	3.05 (11.5)	700 (48)	29	7/8"	3/8"
CJ4T 8758-0X014	6.10 (23.0)		58		
CJ4T 8797-0X014	10.20 (38.6)		97		
CJ4T 8712-0X014	12.50 (47.3)		117		
CJ4T 8714-0X014	14.70 (55.6)		140		
CJ4T 8717-0X014	17.90 (67.8)		170		
CJ4T 11329-0X014	5.33 (20.2)	400 (48)	29	1-1/8"	3/8"
CJ4T 11358-0X014	10.60 (40.1)		58		
CJ4T 11397-0X014	17.80 (67.4)		97		
CJ4T 11312-0X014	22.0 (83.3)		117		
CJ4T 11314-0X014	25.70 (97.3)		140		
CJ4T 11317-0X014	31.27 (118.3)		170		

X = 4 for 316 SS, 5 for ALLOY 20, 6 for HAST C, 8 for PVC, A for PVDF | **Performance curves for all models & series on page 18 and 19**

Dimensions

Shown: Typical Series 1000 Model with Metallic Liquid End and 3/8" NPTM (NATIONAL PIPE THREAD MALE)

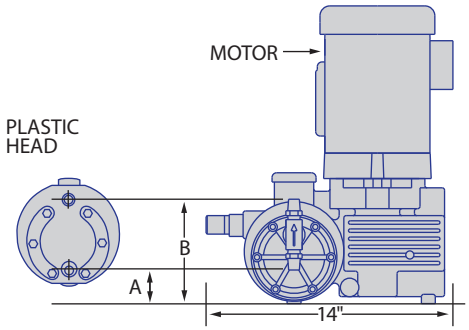

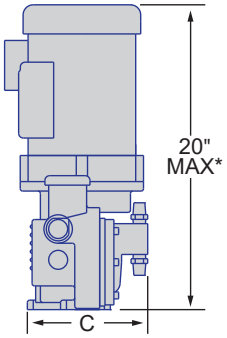

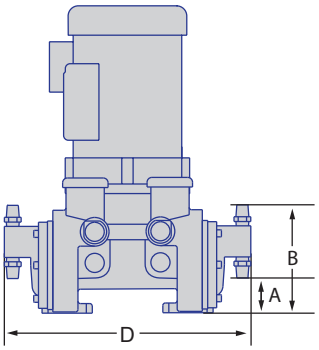

Series 1000, Duplex

ECCA (Electronic Capacity Control Adjuster)

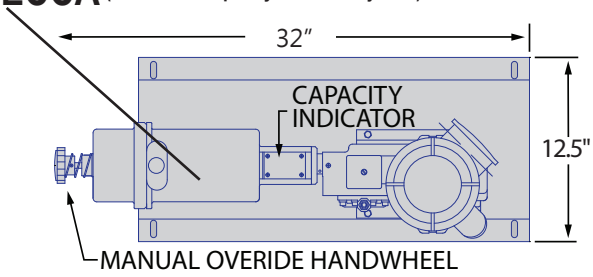

Series 1000 with ECCA

	A	B	C	D	E (NPT)	F (NPT)
Metallic	1-3/4"	5-1/2"	6-1/3"	13"	3/8" M	3/8" M
Plastic**	1-1/4"	5"	7-1/2"	14"	3/4" F	1/2" F
Plastic on 3-1/4 Base	4-1/2"	8-1/4"	7-1/2"	--	3/4" F	1/2" F

*Standard Motor. Subject to change depending on motor specs.
**Plastic liquid end material pump always supplied w/ base.
***Standard weight is 70 lbs. Varies depending on material and configuration.

SERIES 2000

Features

- Flow capacities up to 180 GPH (Duplex)
- Pressure up to 1,800 PSI
- Modular design in aluminum housing
- Metering Accuracy +/- 1%
- Easy capacity controls - Manual/Auto
- Built-in Safety - Internal Relieve Valve
- Available in Duplex to double flow capacity
- Ability to handle difficult liquids like slurries, off-gassing, andhigh viscosity liquids

Specifications

Flow capacity adjustment: 0-100%
While the pump is **running** or **stopped**

Turndown Ratio
Stroke length - 20:1
Stroke frequency - 10:1
Combined - 200:1

Metering Accuracy
Steady state: +/- 1%
Linearity: +/- 1%
Combined: +/- 1%

Maximum process fluid temperature
Custom engineered metallic liquid end: 500°F (260°C)
Metallic liquid end/PTFE diaphragm: 250°F (121°C)
Plastic head: 140°F (60°C)

Hydraulic Oil
Oil capacity: 4 qt.

Plunger Stroke
Stroke length: 1-1/2”

Displacement per stroke - by plunger size
5/8” - 0.2938 cu. in. (4.81 mL)
3/4” - 0.6976 cu. in. (11.43 mL)
1” - 1.1334 cu. in. (18.57 mL)
1-1/4” - 1.8757 cu. in. (30.77 mL)
1-1/2” - 2.0797 cu. in. (34.08 mL)

Liquid End Material Options
316 SS, Alloy 20, Hastelloy C, PVC, PVDF

Cross Section

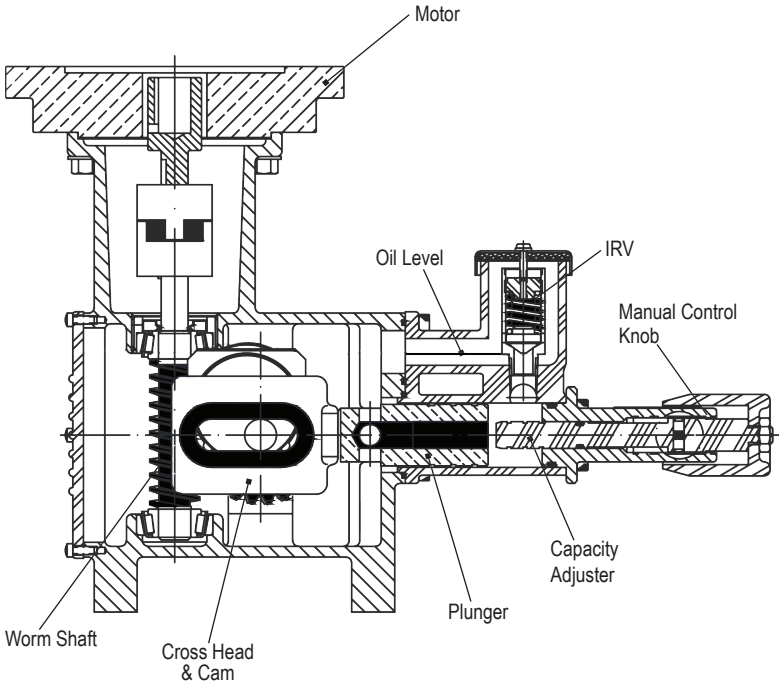

Performance Table

Pump Model Number	Capacity GPH (LPH)	Pressure PSI (bars)	Speed SPM	Plunger Diameter	Connection (Metallic - NPT)
CD3T 0529-0X014	2.84 (10.75)	1,800 (124)	29	5/8"	3/8"
CD3T 0558-0X014	5.69 (21.5)		58		
CD3T 0597-0X014	9.51 (36)		97		
CD3T 0512-0X014	11.47 (43.4)		117		
CD3T 0514-0X014	13.73 (51.9)		140		
CD3T 0519-0X014	18.73 (70.9)		191		
CD3T 0629-0X014	4.7 (17.8)	1,000 (69)	29	3/4"	3/8"
CD3T 0658-0X014	9.4 (35.6)		58		
CD3T 0697-0X014	15.7 (59.8)		97		
CD3T 0612-0X014	19.0 (71.9)		117		
CD3T 0614-0X014	22.7 (85.6)		140		
CD3T 0619-0X014	30.99 (117.3)		191		
CD3T 0829-0X014	7.68 (28.8)	360 (25)	29	1"	1/2"
CD3T 0858-0X014	15.37 (57.5)		58		
CD3T 0897-0X014	25.7 (96.1)		97		
CD3T 0812-0X014	31.0 (115.8)		117		
CD3T 0814-0X014	37.09 (138.9)		140		
CD3T 0819-0X014	50.61 (189.3)		191		
CD3T 1029-0X014	12.67 (45.4)	210 (14)	29	1-1/4"	3/8" M
CD3T 1058-0X014	25.35 (90.8)		58		
CD3T 1097-0X018	42.39 (151.4)		97		1/2" F
CD3T 1012-0X018	51.13 (185.5)		117		
CD3T 1014-0X018	61.18 (227.1)		140		
CD3T 1019-0X018	83.47 (302.8)		191		
CD3T 1229-0X014	14.13 (53.48)	195 (13)	29	1-1/2"	3/8" M
CD3T 1258-0X015	28.25 (106.9)		58		
CD3T 1297-0X018	47.25 (178.8)		97		1/2" F
CD3T 1212-0X018	57 (215.8)		117		
CD3T 1214-0X018	68.19 (258.1)		140		
CD3T 1219-0X018	93 (352)		191		

X = 4 for 316 SS, 5 for ALLOY 20, 6 for HAST C, 8 for PVC, A for PVDF

Performance curves for all models & series on page 18 and 19

Dimensions

Shown: Typical Series 2000 Model with Metallic Liquid End and 1/2" NPTF Discharge/Suction Connections)

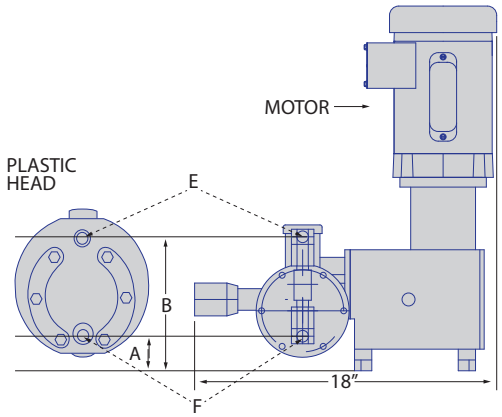

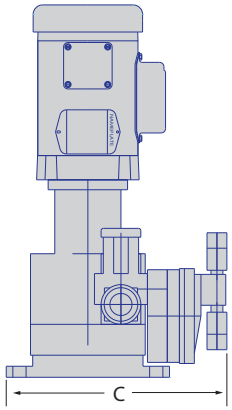

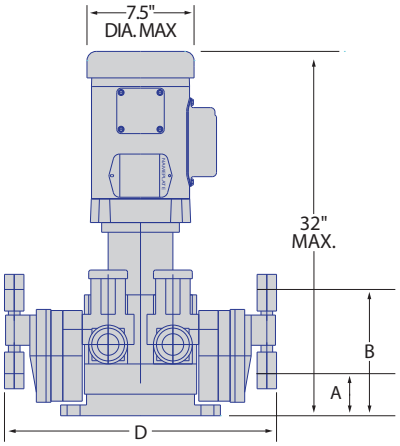

Series 2000, Duplex

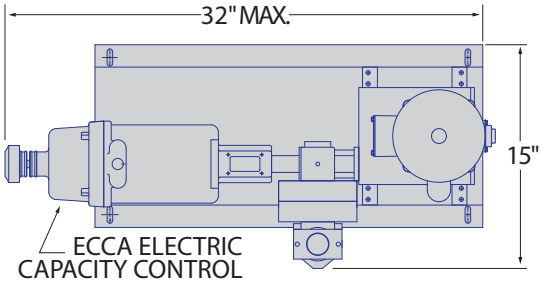

Series 2000 with ECCA

	A	B	C	D	E (NPT)	F (NPT)
Metallic	1"	9"	13"	16-1/2"	1/2" F	1/2" F
Plastic	3"	7-3/8"	13"	17"	3/4" F	1" F

*Standard weight is 85 lbs. Varies depending on material and configuration.

SERIES 3000

3000 SERIES

Features

- Flow capacities up to 920 GPH (Duplex)
- Pressure up to 700 PSI
- Modular design in aluminum housing
- Metering Accuracy +/- 1%
- Easy capacity controls - Manual/Auto
- Built-in Safety - Internal Relieve Valve
- Available in Duplex to double flow capacity
- Ability to handle difficult liquids like slurries, off-gassing, and high viscosity liquids

Specifications

Flow capacity adjustment: 0-100%
While the pump is **running** or **stopped**

Turndown Ratio
Stroke length - 36:1
Stroke frequency - 36:1
Combined - 360:1

Metering Accuracy
Steady state: +/- 1%
Linearity: +/- 1%
Combined: +/- 1%

Maximum process fluid temperature
Custom engineered metallic liquid end: 500°F (260°C)
Metallic liquid end/PTFE diaphragm: 250°F (121°C)
Plastic head: 140°F (60°C)

Hydraulic Oil
Oil capacity: 12 qt.

Plunger Stroke
Stroke length: 3”

Displacement per stroke - by plunger size
1” - 2.3569 cu. in. (38.46 mL)
1-1/4” - 3.6738 cu. in. (60.20 mL)
1-1/2” - 5.2906 cu. in. (86.70 mL)
1-3/4” - 7.2063 cu. in. (118.09 mL)
2” - 9.4102 cu. in. (154.21 mL)
2-1/4” - 11.9023 cu. in. (195.04 mL)
2-1/2” - 14.1561 cu. in. (231.98 mL)

Liquid End Material Options
316 SS, Alloy 20, Hastelloy C, PVC, PVDF

Cross Section

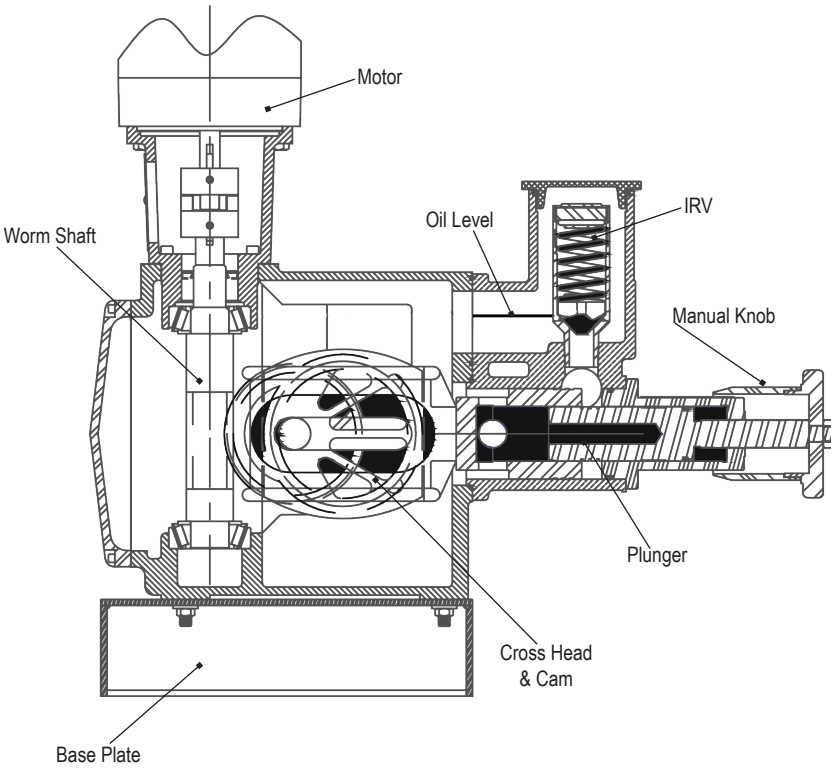

Performance Table

Pump Model Number	Capacity GPH [LPH]	Pressure PSI [bars]	Speed SPM	Plunger Diameter	Connection [Metallic - NPT]
CNIT 0844-0X018	24.11 [60.2]	700 [48]	44	1"	1/2"
CNIT 0858-0X018	31.78 [120.7]		58		
CNIT 0888-0X018	48.21 [181.7]		88		
CNIT 0812-0X018	64.10 [242.3]		117		
CNIT 0814-0X018	76.7 [287.7]		140		
CNIT 1044-0X018	37.88 [94.6]	405 [28]	44	1-1/4"	1/2"
CNIT 1058-0X018	49.94 [189.3]		58		
CNIT 1088-0X018	75.77 [286.5]		88		
CNIT 1012-0X018	100.74 [378.5]		117		
CNIT 1014-0X018	120.54 [454.2]		140		
CNIT 1244-0X018	54.37 [135.9]	265 [18]	44	1-1/2"	1/2"
CNIT 1258-0X018	71.67 [271.8]		58		
CNIT 1288-0X018	108.74 [412.6]		88		
CNIT 1212-0X018	144.57 [548.9]		117		
CNIT 1214-0X01A	172.99 [645.9]		140		1-1/2"
CNIT 1444-0X018	74.12 [185.1]	180 [12]	44	1-3/4"	1/2"
CNIT 1458-0X018	97.71 [370.2]		58		
CNIT 1488-0X018	148.24 [560.2]		88		
CNIT 1412-0X01A	197.1 [745.7]		117		1-1/2"
CNIT 1414-0X01A	235.84 [893.4]		140		
CNIT 1644-0X018	96.79 [241.9]	130 [9]	44	2"	1/2"
CNIT 1658-0X018	127.59 [484.5]		58		
CNIT 1688-0X01A	193.58 [724.4]		88		
CNIT 1612-0X01B	257.37 [976.6]		117		1-1/2"
CNIT 1614-0X01B	307.97 [1,165.9]		140		
CNIT 1844-0X018	122.42 [305.9]	95 [6]	44	2-1/4"	1/2"
CNIT 1858-0X018	161.38 [609.5]		58		
CNIT 1888-0X01A	244.85 [927.4]		88		
CNIT 1812-0X01B	325.54 [1,234.0]		117		1-1/2"
CNIT 1814-0X01C	389.53 [1,476.3]		140		
CNIT 2044-0X018	145.60 [378.5]	75 [5]	44	2-1/2"	1/2"
CNIT 2058-0X01A	191.93 [757.1]		58		
CNIT 2088-0X01B	291.21 [1,135.6]		88		1-1/2"
CNIT 2012-0X01C	387.17 [1,514.2]		117		
CNIT 2014-0X01C	463.28 [1,824.6]		140		

X = 4 for 316 SS, 5 for ALLOY 20, 6 for HAST C, 8 for PVC, A for PVDF

Performance curves for all models & series on page 18 and 19

Dimensions

Shown: Typical Series 3000 Model with Metallic Liquid End and 1-1/2" NPTM Discharge/Suction Connections)

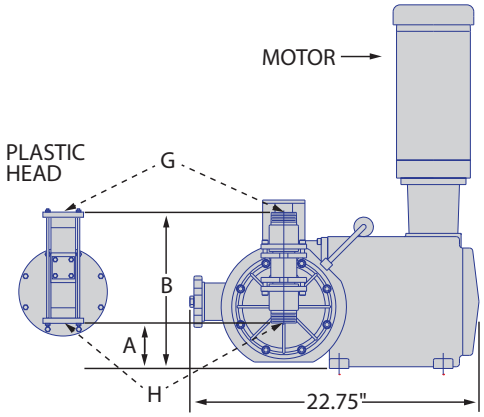

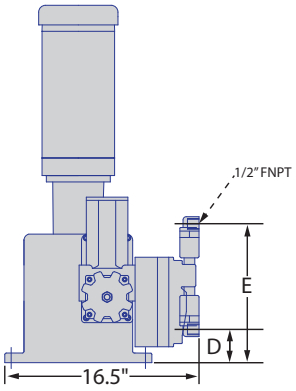

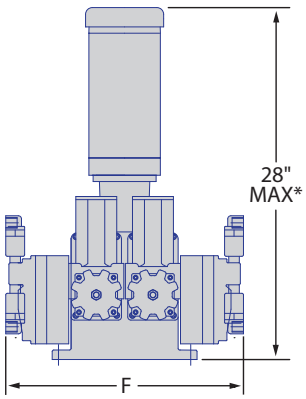

Series 3000, Duplex

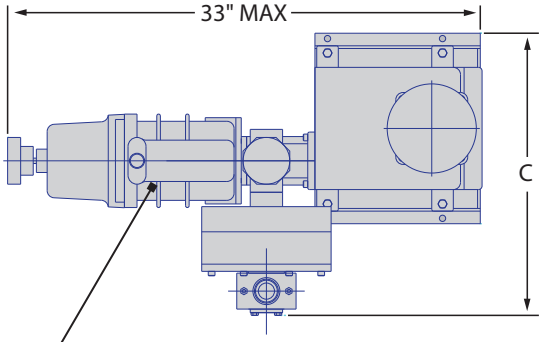

Series 3000 with ECCA
(Electronic Capacity Control Adjuster)

	A	B	C	D	E	F	G (NPT)	H (NPT)
Metallic	3-1/2"	12"	17-1/3"	2-1/3"	10-3/8"	20"	1-1/2" M	1-1/2" M
Plastic	4-5/8"	15-1/3"	18-5/8"	--	--	23-1/4"	1-1/4" F	1-1/4" F

*Standard motor. Subject to change depending on motor specs.
**Standard weight is 250 lbs. Varies depending on material and configuration.

SERIES 4000

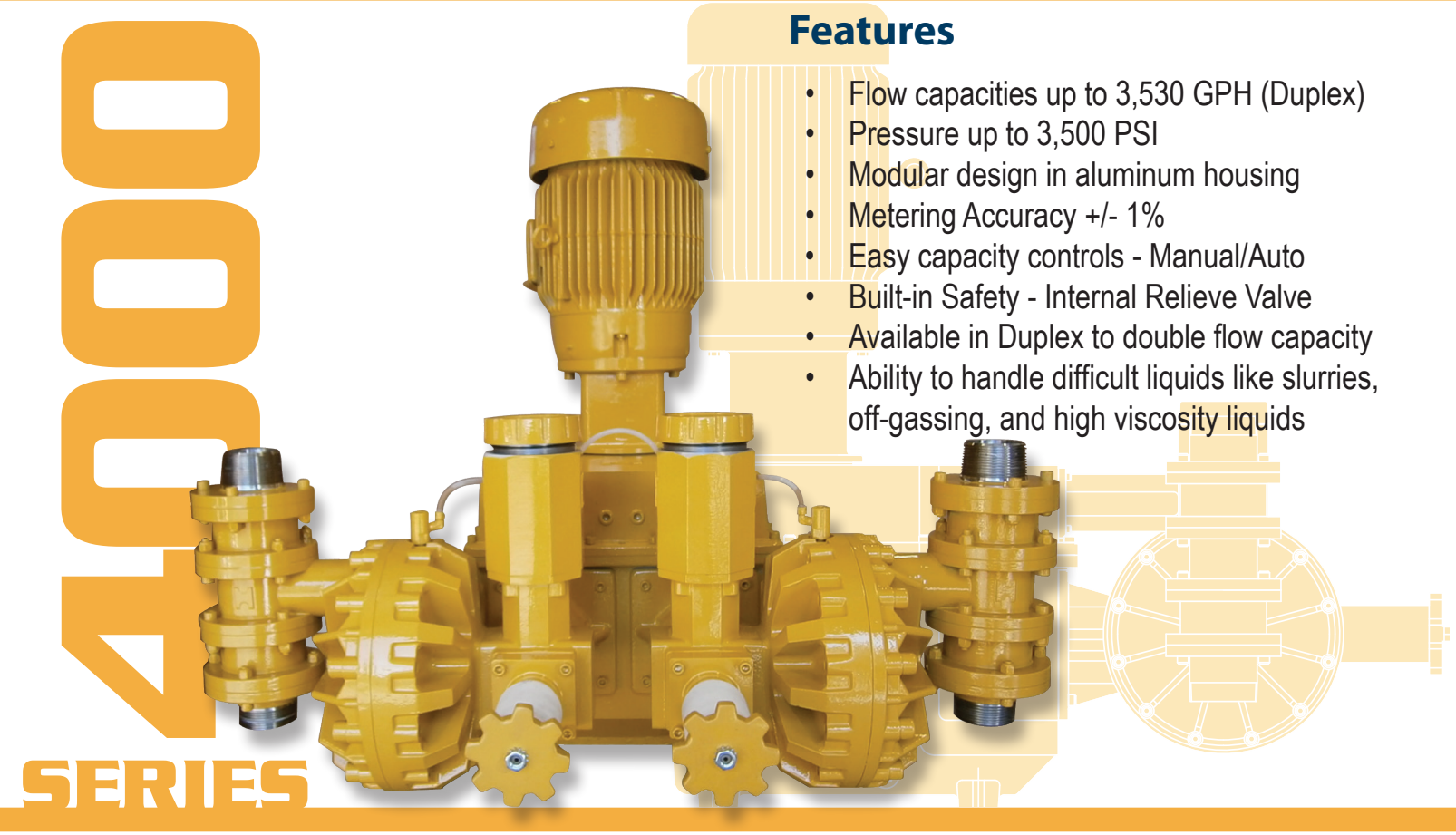

Features

- Flow capacities up to 3,530 GPH (Duplex)
- Pressure up to 3,500 PSI
- Modular design in aluminum housing
- Metering Accuracy +/- 1%
- Easy capacity controls - Manual/Auto
- Built-in Safety - Internal Relieve Valve
- Available in Duplex to double flow capacity
- Ability to handle difficult liquids like slurries, off-gassing, and high viscosity liquids

Specifications

Flow capacity adjustment: 0-100%
While the pump is **running** or **stopped**

Turndown Ratio
Stroke length - 48:1
Stroke frequency - 10:1
Combined - 480:1

Metering Accuracy
Steady state: +/- 1%
Linearity: +/- 1%
Combined: +/- 1%

Maximum process fluid temperature
Custom engineered metallic liquid end: 500°F (260°C)
Metallic liquid end/PTFE diaphragm: 250°F (121°C)
Plastic head: 140°F (60°C)

Hydraulic Oil
Oil capacity: 52 qt.

Plunger Stroke
Stroke length: 4”

Displacement per stroke - by plunger size
7/8” - 2.2698 cu. in. (37.19 mL)
1-1/8” - 3.8013 cu. in. (62.29 mL)
1-9/16” - 7.6453 cu. in. (125.29 mL)
2-1/2” - 19.63 cu. in. (321.77 mL)
3” -28.1989 cu. in. (462.12 mL)
4” - 50.34 cu. in. (824.99 mL)

Liquid End Material Options
316 SS, Alloy 20, Hastelloy C, PVC, PVDF

Cross Section

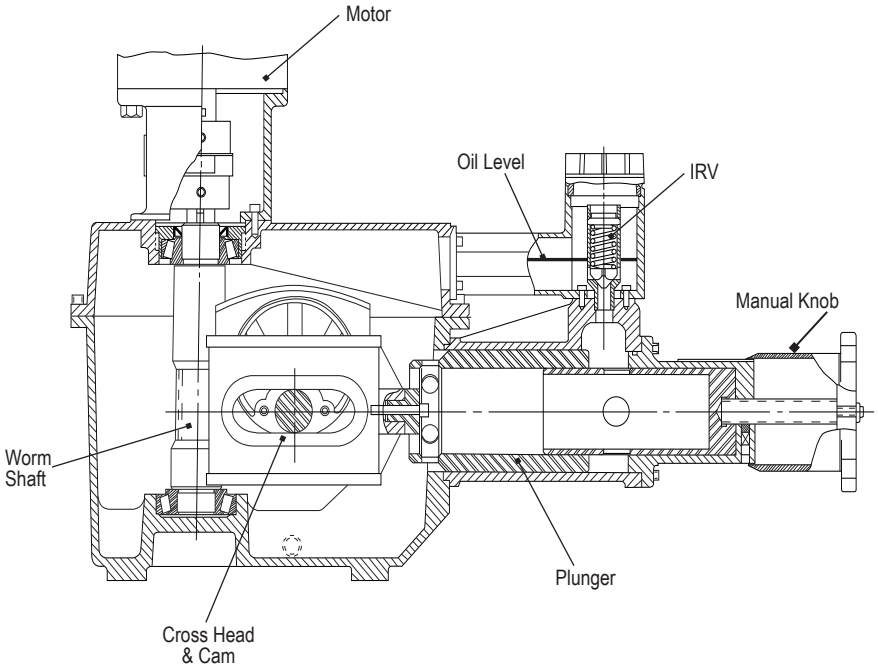

Performance Table

Pump Model Number	Capacity GPH (LPH)	Pressure PSI (bars)	Speed SPM	Plunger Diameter	Connection (Metallic - NPT)
GNIT 0744-BC01A	22.6 (85.5)	3,500 (241)	44	7/8"	1-1/2"
GNIT 0770-BC01A	36.0 (136.3)		70		
GNIT 0788-BC01A	45.0 (170.3)		88		
GNIT 0714-BC01A	72.0 (272.5)		140		
GNIT 0944-BC01A	39.2 (148.3)	2,000 (138)	44	1-1/8"	1-1/2 "
GNIT 0970-BC01A	62.3 (235.8)		70		
GNIT 0988-BC01A	78.4 (296.7)		88		
GNIT 0914-BC01A	124.7 (472)		140		
GNIT 1344-BC01F	78.8 (298)	1,000 (69)	44	1-9/16"	2-1/2"
GNIT 1370-BC01F	125.35 (474)		70		
GNIT 1388-BC01F	157.58 (596.5)		88		
GNIT 1314-BC01F	250.7 (949)		140		
GNIT 2044-BC01F	202.4 (766.1)	370 (26)	44	2-1/2"	2-1/2"
GNIT 2070-BC01F	322 (1,268.9)		70		
GNIT 2088-BC01F	404.88 (1,532.6)		88		
GNIT 2014-BC01F	644.1 (2438.1)		140		
GNIT 2444-BC01H	291 (1,101.5)	295 (20)	44	3"	4"
GNIT 2470-BC01H	463.1 (1,753)		70		
GNIT 2488-BC01H	582.19 (2,203.8)		88		
GNIT 2414-BC01H	926.2 (3506)		140		
GNIT 3244-BC01H	519.35 (1965.9)	160 (11)	44	4"	4"
GNIT 3270-BC01H	826.24 (3127.6)		70		
GNIT 3288-BC01H	1038.7 (3931.9)		88		
GNIT 3214-BC01H	1652.4 (6255)		140		

X = 4 for 316 SS, 5 for ALLOY 20, 6 for HAST C, 8 for PVC, A for PVDF

Performance curves for all models & series on page 18 and 19

Dimensions

Shown: Typical Series 4000 Model with Metallic Liquid End and 2-1/2" NPTM Discharge/Suction Connections)

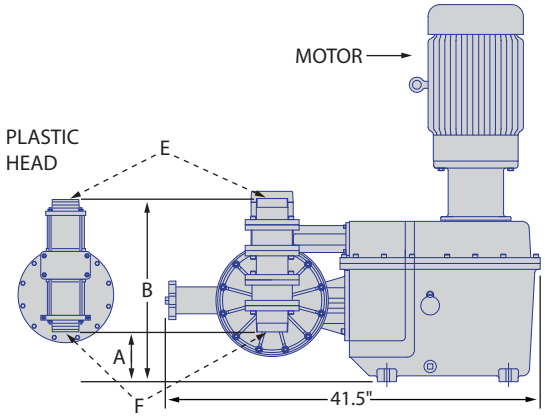

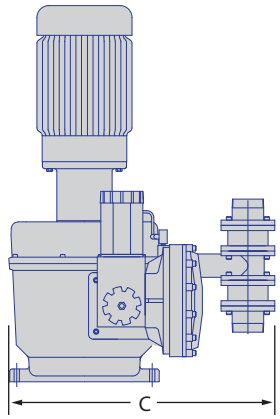

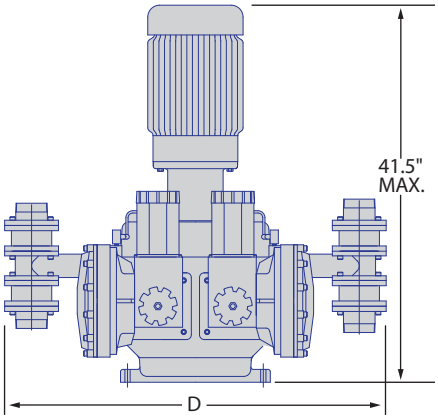

Series 4000, Duplex

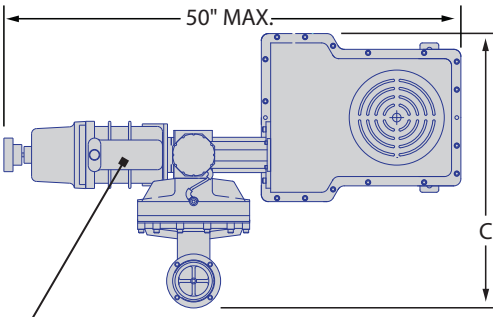

Series 4000 with ECCA
(Electronic Capacity Control Adjuster)

	A	B	C	D	E (NPT)	F (NPT)
Metallic	5-3/4"	19-1/8"	29-1/2"	37-1/2"	1-1/2" to 4" M	1-1/2" to 4" M
Plastic	4-1/8"	24-5/8"	34"	47-5/8"	2-1/2" M	2-1/2" M

*Standard weight is 250 lbs. Varies depending on material and configuration.

SERIES 900

900 SERIES

Features

- Flow capacities up to 6.5 GPH (Duplex)
- Pressure up to 3,000 PSI
- Modular design in aluminum housing
- Metering Accuracy +/- 1%
- Easy capacity controls - Manual/Auto
- Built-in Safety - Internal Relieve Valve
- Available in Duplex to double flow capacity

Specifications

Flow capacity adjustment: 0-100%
While the pump is **running** or **stopped**

Turndown Ratio
Stroke length - 10:1
Stroke frequency - 10:1
Combined - 100:1

Metering Accuracy
Steady state: +/- 1%
Linearity: +/- 1%
Combined: +/- 1%

Maximum process fluid temperature
Custom engineered metallic liquid end: 500°F (260°C)
Metallic liquid end/PTFE diaphragm: 250°F (121°C)
Plastic head: 140°F (60°C)

Oil Capacity
Hydraulic oil: 1 qt.
Automatic Transmission Fluid: 1 qt.

Plunger Stroke
Stroke length: 3/4”

Displacement per stroke - by plunger size
3/16” - 0.0207 cu. in. (0.33 mL)
1/4” - 0.0368 cu. in. (0.60 mL)
3/8” - 0.0828 cu. in. (1.35 mL)

Liquid End Material Options
316 SS, Alloy 20, Hastelloy C, PVC, PVDF

Cross Section

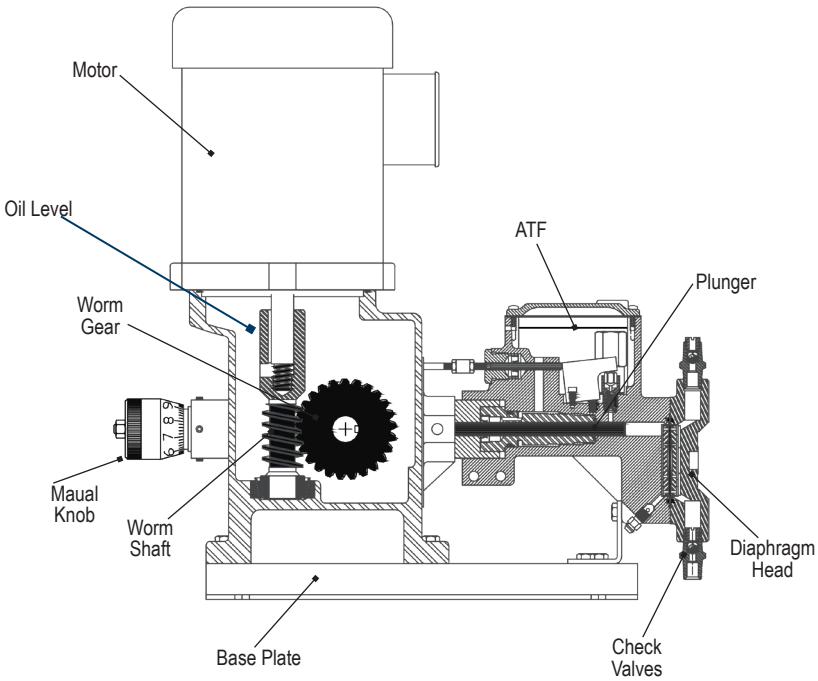

Performance Table

Pump Model Number	Capacity GPH (LPH)	Pressure PSI (bars)	Speed SPM	Plunger Diameter	Connection (Metallic - NPT)
DM3T 1929-0X013	0.14 (0.53)	3,000 (206)	29	3/16"	1/4"
DM3T 1958-0X013	0.28 (1.06)		58		
DM3T 1997-0X013	0.47 (1.78)		97		
DM3T 1912-0X013	0.56 (2.12)		117		
DM3T 1914-0X013	0.67 (2.54)		140		
DM3T 1917-0X013	0.82 (3.10)		170		
DM3T 2529-0X013	0.24 (0.91)	3,000 (206)	29	1/4"	1/4"
DM3T 2558-0X013	0.49 (1.85)		58		
DM3T 2597-0X013	0.82 (3.10)		97		
DM3T 2512-0X013	1.0 (3.79)		117		
DM3T 2514-0X013	1.19 (4.50)		140		
DM3T 2517-0X013	1.44 (5.45)		170		
DM3T 3829-0X013	0.55 (2.08)	3,000 (206)	29	3/8"	1/4"
DM3T 3858-0X013	1.11 (4.20)		58		
DM3T 3897-0X013	1.86 (7.04)		97		
DM3T 3812-0X013	2.24 (8.48)		117		
DM3T 3814-0X013	2.69 (10.18)		140		
DM3T 3817-0X013	3.25 (12.30)		170		

X = 4 for 316 SS, 5 for ALLOY 20, 6 for HAST C, 8 for PVC, A for PVDF

Performance curves for all models & series on page 18 and 19

ULTRA LOW FLOW SERIES

Designed specifically for Low Flow Applications in Oil & Gas, Pharma, Cosmetics, Food & other industrial applications.

Lowest flow Hydraulic Diaphragm Metering Pump on the market, made in compliance with API 675.

Dimensions

Shown: Typical Series 900 Model with Plastic Liquid End and 1/4" NPTM Discharge/Suction Connections)

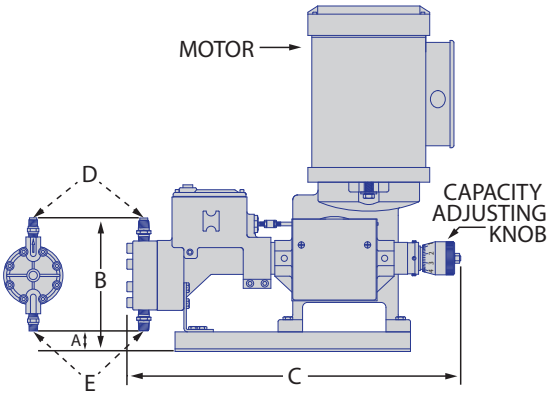

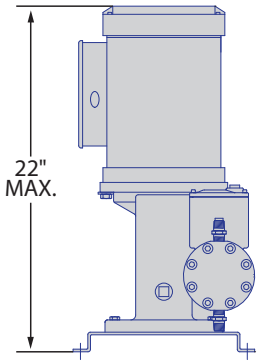

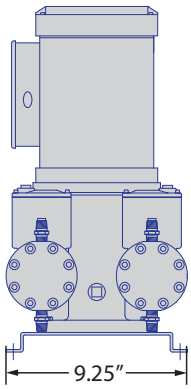

Series 900, Duplex

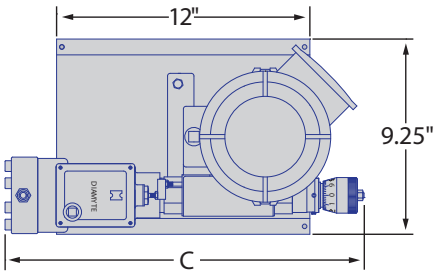

Series 900 with ECCA
(Electronic Capacity Control Adjuster)

	A	B	C	D (NPT)	E (NPT)
Metallic	1/2"	7-3/8"	17-1/2"	1/4" M	1/4" M
Plastic	1/2"	7-3/8"	18-1/2"	1/2" M	1/2" M

*Standard weight is 75 lbs. Varies depending on material and configuration.

PERFORMANCE CURVES

Series 1000

3/8” Plunger

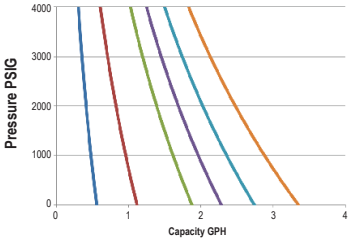

9/16” Plunger

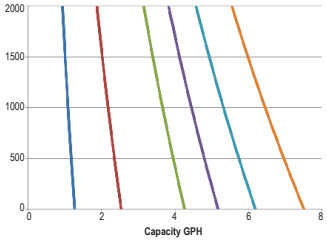

3/4” Plunger

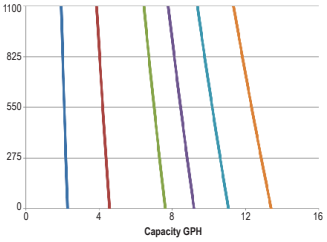

7/8” Plunger

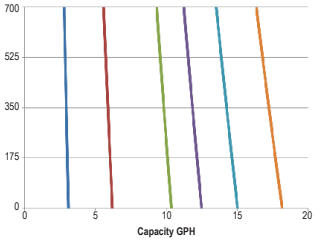

1-1/8” Plunger

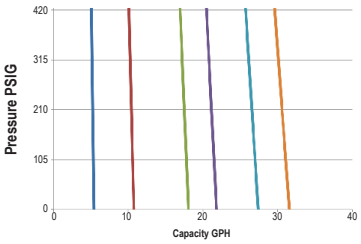

1-5/8” Plunger

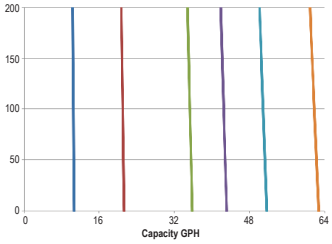

Series 1000:

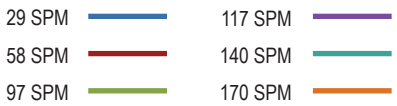

Series 2000

5/8” Plunger

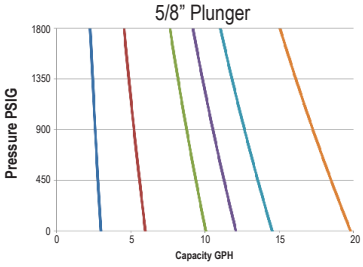

3/4” Plunger

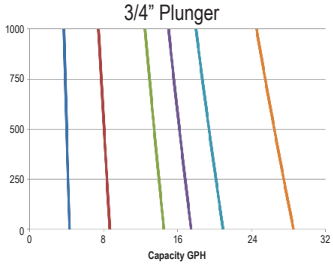

1” Plunger

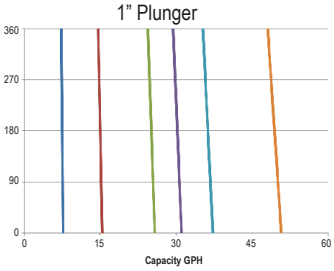

1-1/4” Plunger

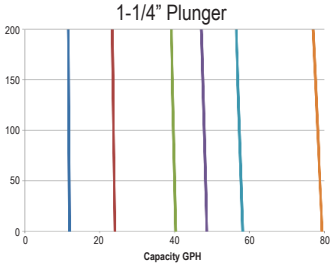

1-1/2” Plunger

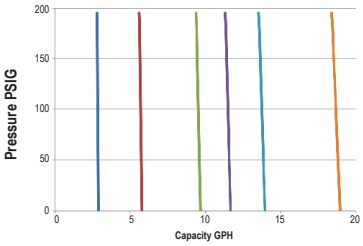

Series 2000:

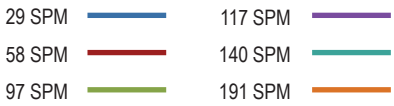

Series 3000

1” Plunger

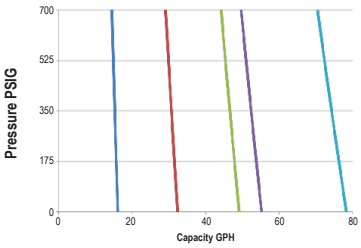

1-1/4” Plunger

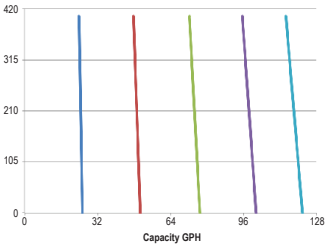

1-1/2” Plunger

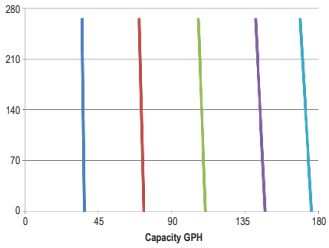

1-3/4” Plunger

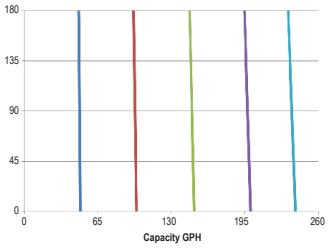

Series 3000 (cont.)

2" Plunger

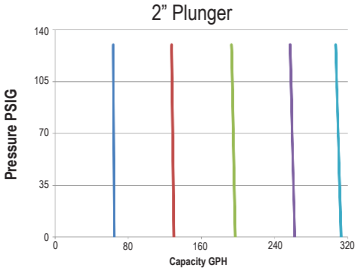

2-1/4" Plunger

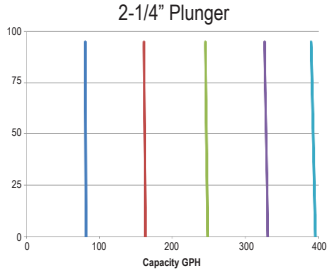

2-1/2" Plunger

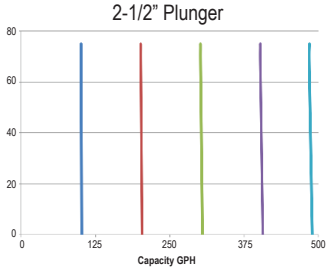

Series 3000:

- 29 SPM
- 58 SPM
- 97 SPM
- 117 SPM
- 140 SPM

Series 4000

7/8" Plunger

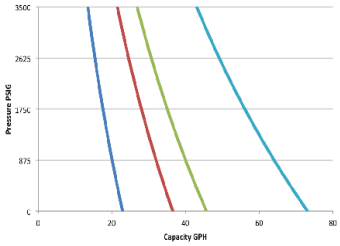

1-1/8" Plunger

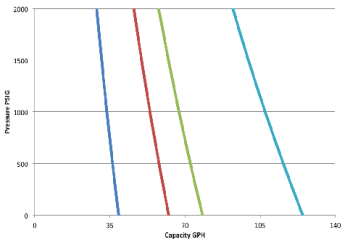

1-9/16" Plunger

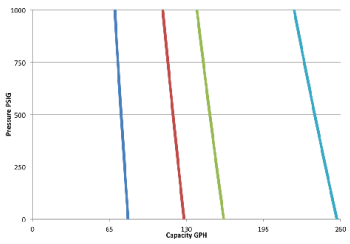

2-1/2" Plunger

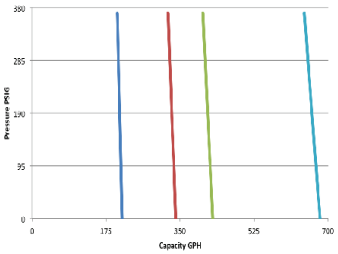

3" Plunger

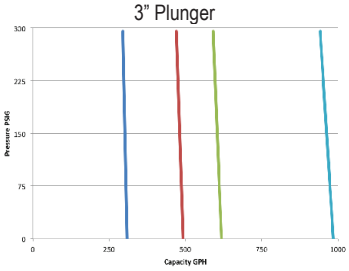

4" Plunger

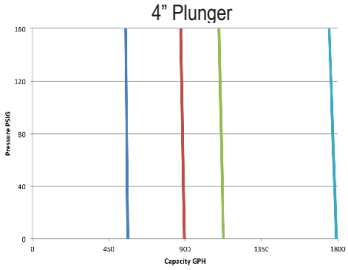

Series 4000:

- 44 SPM
- 70 SPM
- 88 SPM
- 140 SPM

Series 900

3/16" Plunger

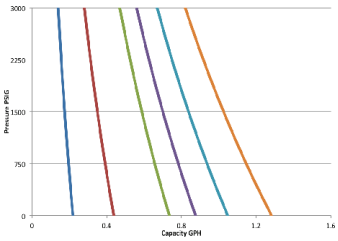

1/4" Plunger

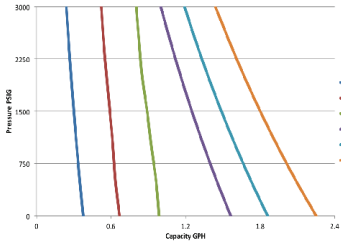

3/8" Plunger

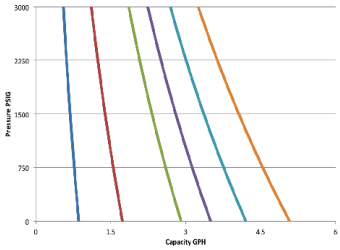

Series 900:

- 29 SPM
- 58 SPM
- 97 SPM
- 117 SPM
- 140 SPM
- 170 SPM

ACUFLOW HYDRAULIC METERING PUMP MODEL CODE

TYPICAL ACUFLOW MODEL: **AAAB CC(C)DD-EEFFGHY** Please see below for breakdown of this code

AAA: ACUFLOW PUMP SERIES IDENTIFIER

Series 900 - DM4 (Standard), DL4, DL3, etc.
Series 1000 - CJ4 (Standard), CA4, CJ3, etc.
Series 2000 - CD3 (Standard), CR3, CQ3, CL3, etc.
Series 3000 - CNI (Standard), KBI, HFI, CMI, etc.
Series 4000 - GNI (Standard), GMI, etc.

B: MAIN PUMPING ELEMENT

T = Single PTFE Disc Diaphragm
W = Double PTFE Disc Diaphragm
A = Single Hypalon Tube
B = Single Viton Tube
S = Suction Lift

CC(C): PLUNGER DIAMETER

SERIES 1000
38 = 3/8”
56 = 9/16”
75 = 3/4”
87 = 7/8”
113 = 1-1/8”
162 = 1-5/8”

SERIES 2000
05 = 5/8”
06 = 3/4”
08 = 1”
10 = 1-1/4”
12 = 1-1/2”

SERIES 3000
08 = 1”
10 = 1-1/4”
12 = 1-1/2”
14 = 1-3/4”
16 = 2”
18 = 2-1/4”
20 = 2-1/2”

SERIES 4000
07 = 7/8”
09 = 1-1/8”
13 = 1-9/16”
20 = 2-1/2”
24 = 3”
32 = 4”

SERIES 9000
19 = 3/16”
25 = 1/4”
38 = 3/8”

DD: STROKES PER MINUTE

29 = 29 SPM
44 = 44 SPM
58 = 58 SPM
88 = 88 SPM
97 = 97 SPM
12 = 117 SPM
14 = 140 SPM
17 = 170 SPM
19 = 190 SPM

EE: LIQUID END MATERIAL

04 = 316 Stainless Steel
05 = Alloy 20
06 = Hastelloy C
08 = PVC
0A = Kynar (PVDF)

FF: CONFIGURATION CODE

01 = Simplex Manual Adjustment
02 = Duplex Manual Adjustment
03 = Simplex Pneumatic Adjustment
04 = Duplex Pneumatic Adjustment
05 = Simplex Electronic (4-20mA)
06 = Duplex Electronic (4-20mA)

G: VALVE BALL SIZE

3 = 1/4”
4 = 3/8”
5 = 1/2”
6 = 5/8”
7 = 3/4”
8 = 7/8”
9 = 1”
A = 1-1/4”
B = 1-1/2”
C = 1-3/4”
D = 2”
E = 2-1/4”
F = 2-1/2”
G = 3”
H = 4”

H: LIQUID CONNECTION

Blank = NPT
F = Flange

Y: SPECIAL CONFIGURATION

Blank = No degassing valve
D = Degassing valve
HP = High pressure

Capacity Control Options

The capacity of these pumps can be adjusted by adjusting the stroke length and stroke speed.

Capacity Control Options: All AcuFlow pumps come with manual stroke length controls.

Stroke Length Controls:
Manual - Standard on all pumps
Electric - Electric stepper motor; capable of 4-20mA input
Pneumatic - Runs on 30 PSI air for hazardous environment

Stroke Speed Controls: Variable Frequency Drive - AC/DC

Leak Detection Options

There are two types of leak detection options available with AcuFlow pumps.

Conductive: Conductivity probe between 2 diaphragms to sense any break/rupture.

Vacuum: Uses a vacuum switch between 2 diaphragms to sense rupture/failure.

Liquid Handling Options

AcuFlow pumps are used with many kinds of liquids, some of which may need special configurations.

Tubular: For liquids with suspended fine solids/slurries that may clog. Perfect fit for high viscosity liquids.

Degassing Valve: Some challenging liquids can cause air locking due to off-gassing. Our pump head with degassing valve ensures accurate and consistent pumping by expelling gas bubbles from the pump head.

Double Ball Check Valve: To ensure you have positive valve shut off.

Tungsten Carbide Valve Balls: For abrasive liquids.

Liquid Handling Options

Liquid Connections: NPT, Flange, Triclamp

Motor Options:
Enclosure - TEFC, TENV, Explosion Proof, Washdown
Power Supply - ACV 115V, 230V, 380V, 460V, 575V, DC-12, 24, 90,180, Single Phase, Three Phase

Adjusting Stroke Length

Manual Control

Our standard hydraulic diaphragm metering pump's volume (capacity) can be adjusted from 100% down to 10% by changing the stroke length without compromising the accuracy. Our pumps are factory set at 100% of the maximum pump capacity and can be adjusted by turning the manual knob to the preferred percentage. The stroke length of AcuFlow Pumps can be adjusted while the pump is running. This makes achieving the exact amount of flow quick and easy.

Electronic Capacity Control Adjuster (ECCA)

AcuFlow's Electronic Capacity Control Adjuster (ECCA™) permits the automatic control of pump capacity by changing the stroke length. Replacing the standard manual micrometer knob and mounting directly on the pump, the ECCA uses miniaturized, state-of-the-art electronic technology built around an AC synchronous motor. This permits precise actuator travel, without hunting or overshoot.

Intelligent Verification and Control System (IVAX)

Our standard hydraulic diaphragm metering pump's volume (capacity) can be adjusted from 100% down to 10% by changing the stroke length without compromising the accuracy. Our pumps are factory set at 100% of the maximum pump capacity and c act amount of flow quick and easy.

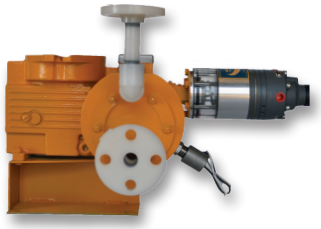

Pneumatic Capacity Control (PACO)

AcuFlow's Pneumatic Capacity Control (PACO™) permits the automatic adjustment of pump capacity. Replacing the standard manual micrometer knob and mounting directly on the pump, the PACO permits remote capacity adjustment from a manual loading station and/or a response to an instrument air signal from a process controller.

Adjusting Stroke Speed

Variable Frequency Drive (VFD)

The HydroDrive™ AC Variable Frequency Drive is a variable speed control in a NEMA 4X (IP-65) washdown, watertight enclosure. It is designed to operate 208-230 Volt 3-Phase AC induction motors through 3.6 Amps RMS. The sine wave coded Pulse Width Modulated (PWM) output operates at a frequency of 16 Hz which provides high torque and efficiency at a low noise level.

Variable Speed Drive

Specifically designed for use with metering pumps, the AcuFlow HydroDrive™ DC SCR Variable Speed Drive is a NEMA 4X (IP-65) variable speed motor control for shunt wound or permanent magnet motors. Its rugged, die cast aluminum housing is protected with an acrylic coating for maximum corrosion resistance, making it suitable for application requiring washdown, watertight integrity. All switches are sealed with rubber boots and the manual speed adjustment potentiometer incorporates a shaft seal.

Dual Axis Pump Control

By combining both stroke length and speed we get control and fine resolution. Use either the manual or automative stroke length adjuster with the VFD to control pump speed.

TYPICAL ACUFLOW PUMP INSTALLATION

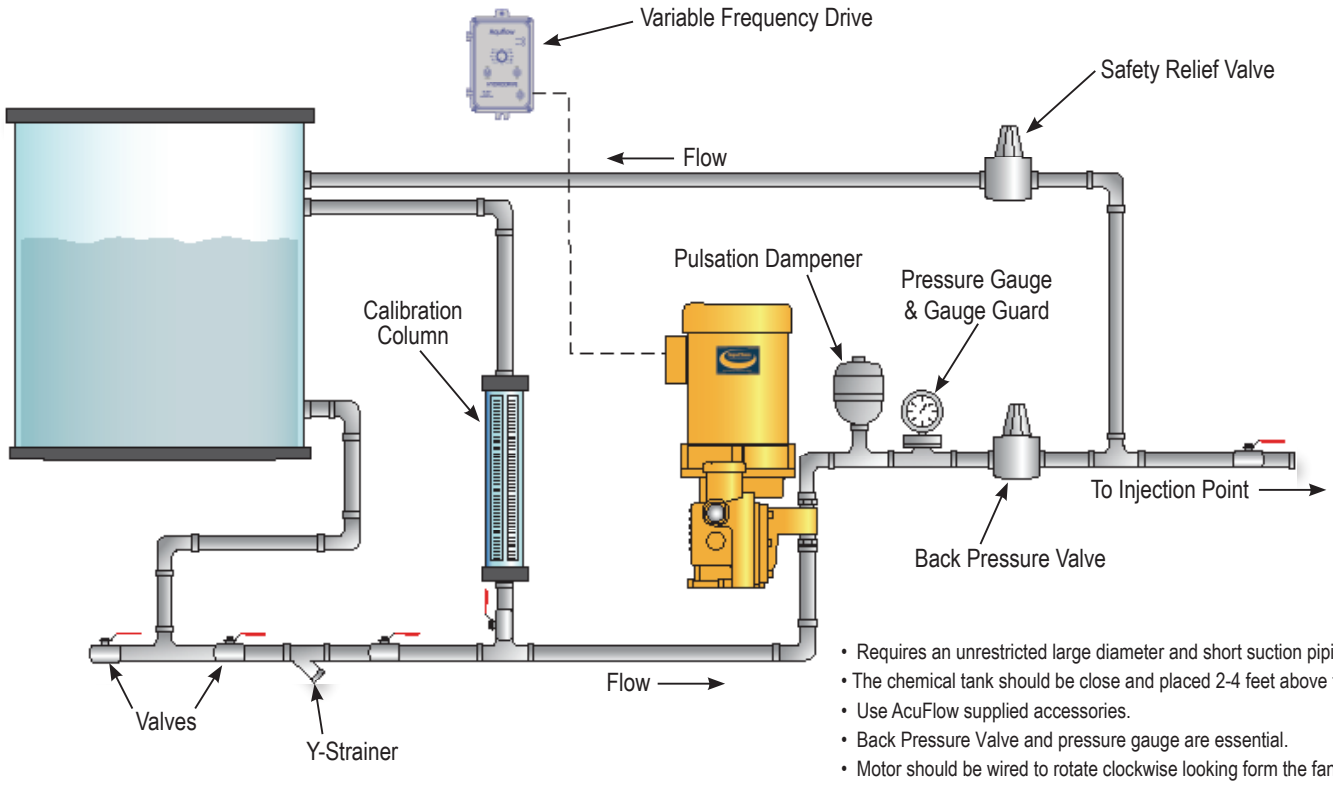

- Requires an unrestricted large diameter and short suction piping.
- The chemical tank should be close and placed 2-4 feet above the pump.
- Use AcuFlow supplied accessories.
- Back Pressure Valve and pressure gauge are essential.
- Motor should be wired to rotate clockwise looking form the fan end.

CHEMINJECTOR SYSTEMS

Customized Reliability - Complete Chemical Feed Systems

EVERYTHING YOU NEED FOR ACCURATE CHEMICAL DELIVERY IN YOUR PROCESS

- Tell us your chemical dispensing requirements. We will build a customized system for you.
- We will also provide you with system automation to match your needs.
- A complete turnkey system that can perform dependably and durably with minimal down time.

FROM CHEMICAL TANK TO INJECTION QUILL - COMPATIBLE ACCESSORIES

- We have pre-matched every component that goes in the system. No incompatibility issues.
- Tested components and controls to ensure optimal performance.
- One responsive team. Comfort in knowing you can call one team known for its responsiveness.

AVAILABILITY OF ALL SERVICE PARTS UNDER ONE ROOF

- We maintain adequate inventory of critical service parts to ensure minimal down time.
- Our vendors also support us with similar availabilities for outsourced parts.
- Since we maintain complete records for all CI systems built, we can always get the right parts.

SKID MOUNTED, MOBILE STATIONS, SITE MOUNTED, VEHICLE MOUNTED OPTIONS

- While most assemblies are skid mounted, which are then placed at the site, there are some systems that are too big for skid mounting. For such systems, we provide on-site assembly.
- Where mobility is important, we have built mobile systems mounted on carts / trailers or even mounted directly on a vehicle for covering long distances.

ACCESSORIES

Calibration Columns:
- Help calibrate the pump accurately
- Should be based on the flow rate and chemical compatibility to the fluid
- Available as 0-10 liters in PVC, Stainless Steel,etc

Back Pressure Valves:
- Maintain steady shut off pressure for valves
- Allow for repeatability of a constant fluid discharge per stroke
- Available as 3/8" to 2" in PVC, Stainless Steel, Alloy 20, PVDF and Hastelloy C

Safety Relief Valves:
- For additional layer of safety from over pressurization
- Used when pumps are capable of higher pressure than the discharge line pressure
- Available as 3/8" to 2" in PVC, Stainless Steel, Alloy 20, PVDF and Hastelloy C

Pressure Gauge with Isolator:
- To visually see the functionality of the pump
- Isolator separates internal components from chemicals
- Available in PVC, Stainless Steel, Alloy 20, PVDF and Hastelloy C

Flow Meters:
- Detect low flow rate as low as 1.8 GPH
- Compatible with most chemicals

Strainers:
- To keep the debris away from check valves

Pulsation Dampeners:
- To get a pulse-less, steady flow
- Removes a high degree of pulsing and surging in the line
- Available as 0-10 liters in PVC, Stainless Steel, Alloy 20, PVDF and Hastelloy C

Standard Range of ChemInjector Packages

CHEMINJECTOR BASIC ASSEMBLY

Essential accessories like Back Pressure Valve, Pressure Relief Valve, Inlet and Discharge Valves, Connecting piping mounted on a simple skid along with the pump and motor.

CHEMINJECTOR STANDARD SYSTEM

In addition to the Basic Assembly components, we add Calibration Column, Inlet Strainer, Pressure Gauge with Isolator, Control Panel with On / Off Switch.

CHEMINJECTOR AUTO SYSTEM

This includes automation controls which can be communicated with a 4-20mA signal from a computer or a SCADA. Capacity is adjusted with either a VFD or ECCA (Stroke Adjuster).

CHEMINJECTOR AUTO PLUS SYSTEM

This also includes a feedback loop from a Flow Meter to ensure the accurate delivery of the chemical. This system also comes with an optional memory for record keeping.

CHEMINJECTOR AUTO PLUS REMOTE CONTROL SYSTEM

As the name suggests, this system has the additional capability to be controlled remotely using a radio signal or over the internet using a computer, tablet or smart phone.

Most Complete Line of Pumps

S 900 - 0 to 3.0 GPH, 0 to 3000 PSI
S 1000 - 0 to 62 GPH, 0 to 3000 PSI
S 2000 - 0 to 112 GPH, 0 to 1800 PSI
S 3000 - 0 to 482 GPH, 0 to 700 PSI
S 4000 - 0 to 3530 GPH, 0 to 3500 PSI

Corrosion Resistant Materials

316 Stainless Steel, Alloy 20, Hastelloy C, PVC, PVDF, Acrylic

ChemInjector Chemical Systems

Complete customized chemical system
Uninterrupted chemical delivery
Perfectly matched accessories
Controls that are user friendly
All components proven to work together
Easy to operate, maintain and service
No downtime with parts availability

ACUFLOW WARRANTY - INDUSTRY LEADING

For Hydraulic diaphragm metering pumps manufactured in the USA!

AcuFlow has been manufacturing premium quality hydraulic diaphragm metering pumps for over 46 years since 1972. We have refined the design and perfected the performance over that period to earn a reputation as a maker of long-lasting durable pumps that never quit. We have numerous testimonials from our customers who had made the change from competitive pumps to AcuFlow never to buy another brand again.

It is with this confidence that AcuFlow offers a limited warranty, for all its hydraulic diaphragm metering pumps that are manufactured in Irvine, California, USA, up to 3 years on all pre-qualifications and registered applications.

OTHER PUMP LINES WE CARRY INCLUDE:

TAPFLO AIR OPERATED DIAPHRAGM PUMPS

Tapflo America sells high end Air Operated Diaphragm pumps made by Tapflo, a Sweden based manufacturer. Tapflo has a complete line of AODD pumps made out of corrosion resistant plastics and metals. Their plastic pump housings are machined out of solid block of material which ensure tighter tolerances and hence better sealing surfaces. This ensures longer leak-free life in comparison to molded plastic pumps.

Tapflo is also known for their line of sanitary and pharmaceutical pumps. Tapflo makes the only USP Class VI certified line of pharmaceutical pumps. Flow rates over 212 GPM in sizes up to 3" inlet and outlet.

AcuFlow
Metering Pumps & Systems

AcuFlow
1642 McGaw Avenue
Irvine, CA 92614 USA
sales@acuflow.com

Ph: 949-757-1753
Fax: 949-757-1687
www.acuflow.com

Follow Us:
ACUFLOW
ACUFLOWPUMPS